NORTH AMERICA

High Performance Pumps and Accessories

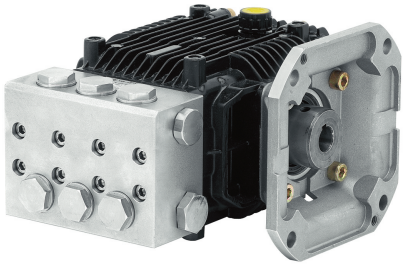

2003 Price List

Page ▶ Index

Table of Contents

PUMPS — PAGE

XJ-E Series Pumps ..... 2 - 3
XJV-E 3400 RPM – XJW-E 3400 RPM
SJ / XJ Series Pumps ..... 4 - 5
SJV 3400 RPM – SJW 3400 RPM – XJV 3400 RPM
BKV Series Pumps ..... 6 - 7
BKV 3400 RPM
XT Series Pumps ..... 8 - 11
XT 1450 RPM – XTA 1750 RPM – XTV 3400 RPM
XM / SXM Series Pumps ..... 12 - 17
XM 1450 RPM – XMA 1750 RPM – SXMA 1750 RPM – XMV 3400 RPM – SXMV 3400 RPM
RK Series Pumps ..... 18 - 21
RK 1450 RPM – RKA 1750 RPM – RKV 3400 RPM
SRK Series Pumps ..... 22 - 23
SRK 1450 RPM - SRKV 1750 RPM
XW Series Pumps ..... 24 - 27
XW 1450 RPM – XWA 1750 RPM
XWT 500 RPM – XWF 1000 RPM – XWL 1450 RPM – XWLA 1750 RPM
SX Series Pumps ..... 28 - 29
SXW 1450 RPM – SXWA 1750 RPM
GXMV / GRKV Series Pumps ..... 30 - 31
GXMV – GRKV 3400 RPM
Car Wash Series Pumps ..... 32 - 35
RCW 950 RPM – RCW 1450 RPM
CWX 950 RPM – CWX 1200 RPM – CWX 1750 RPM
Stainless Steel Series Pumps ..... 36 - 39
XMA-SS 1750 RPM – RK-SS 1450 RPM – RKA-SS 1750 RPM

ACCESSORIES — PAGE

Crankcase Oil / Tools / Rail Kits 40
Gear Boxes / Flanges / Couplings / Electric Clutch 41
Regulating Valves / Control Sets 42
Unloader Valves 43
Unloader Valves w/Pressure Switch / SS Unloader Valve / Balance Relief Valve 44
Spray Guns 45
Spray Guns w/Lance Extensions 46
Lances – Extensions / Nozzle 47
Dual Lance 48
Lances 49
High Pressure Spray Nozzles 50
Cleaning Heads 51
Nozzle Holders / Lance Fittings / Vari-Spray Nozzle Heads 52
Turbo Nozzles 53
Turbo Nozzle Inline Filters / Thermal Relief Valve / Easy Start Valve Safety Release Valve / Pressure Switches 54
Injectors / Line Strainers 55
Ball Quick Coupling / Garden Hose Adapters 56
Sandblast Kits 57
Swivel Coupler / Quick Coupling & Plugs 58
Pressure Gauges / Valve Caps / Jetter Valves / Suction Filter and Detergent Hose 59
Oil Resistant Synthetic Rubber Hose / Braided Rubber Hose / Drain Cleaner Kits 60
Cart Assemblies / Pressure Washer Accessories 61
Rotating Brushes / Fixed Brushes / Foamer 62
Extensions / Adapters 63
Portable Electric Pressure Washers 64
How to Read AR North America Pump Numbers 65
Nozzle Charts 66
Sales and Warranty Conditions 67
Extras 68

FEATURING

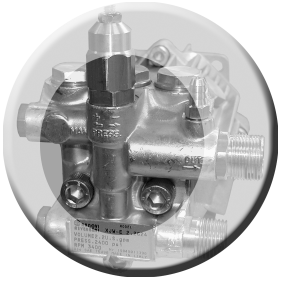

MANIFOLD: High strength forged brass for long term use.
BOLTS: Three 10mm grade 8.8.

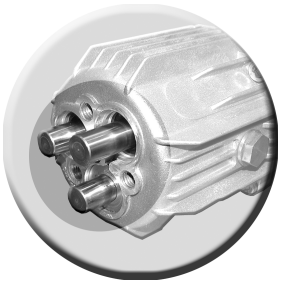

PISTONS: Polished stainless steel for longer pump life in harsh environments.

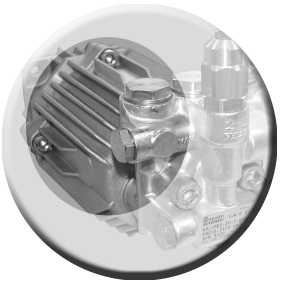

CRANKCASE: Precision die-cast, large cooling fins for maximum heat dissipation.

BEARINGS: Angular contact ball bearing stabilizes the crankshaft and one thrust needle bearing absorbs the plunger load and assure long radial plate life. All of the thrust plates are made of heat treated hardened steel for extended life.

VALVES, SEATS, and ***SPRINGS:*** Stainless steel with specially designed Ultra Form cages provide extra long life and positive seating.

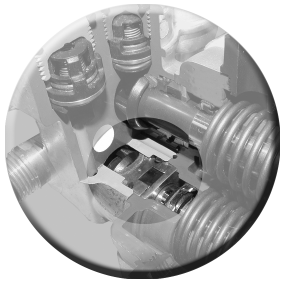

SEALS and ***V-PACKINGS:*** Continuously lubricating for extended life.

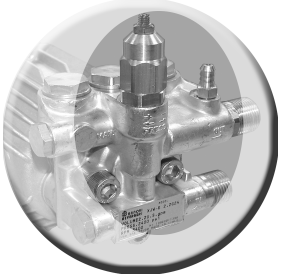

UNLOADER: Built in to optimize performance while reducing setup time. Integral trap pressure, fixed or adjustable chemical injector.

XJV-E D VERSION + F7

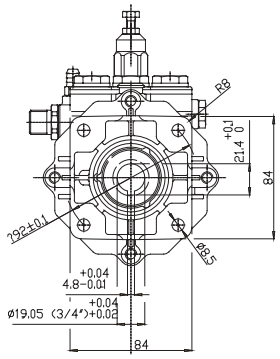

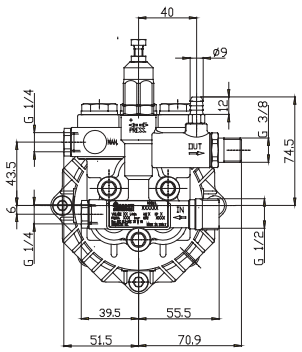

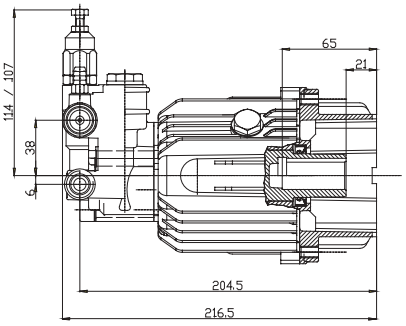

XJW-E D VERSION + F27

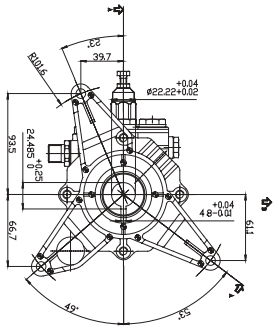

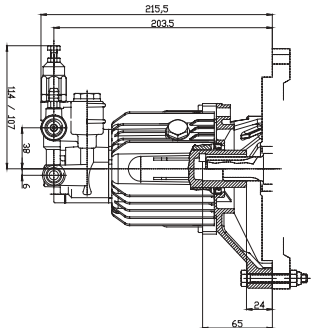

* Measurements are in Metric

XJV-E & XJW-E - Economy Axial Radial Drive Pumps

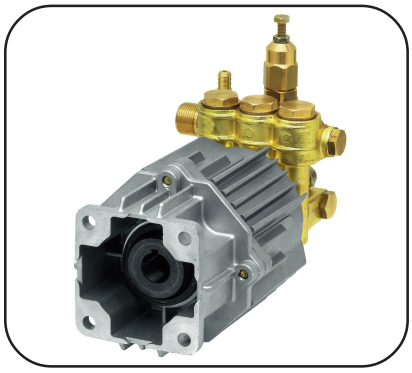

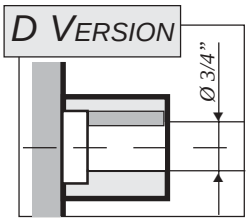

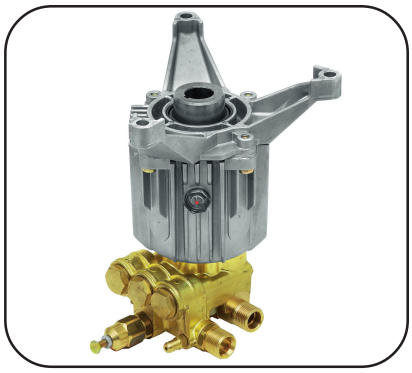

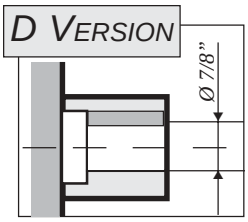

XJV-E 3400 RPM D VERSION - 3/4" WITH GAS ENGINE FLANGE (F7)

MODEL	MAX. GPM	MAX. LMP	MAX. PSI	MAX. BAR	POWER EBHP	BORE DIA. MM	STROKE MM	WEIGHT LBS.	LIST PRICE
XJV-E2G15D-F7*	2.0	7.6	1450	100	2.0	15	4.8	11	$225.00
XJV-E2G20D-F7*	2.0	7.6	2000	140	2.8	15	4.8	11	225.00
XJV-E2.5G15D-F7*	2.5	9.5	1450	100	2.5	15	5.8	11	225.00
XJV-E2.5G20D-F7*	2.5	9.5	2000	140	3.4	15	5.8	11	225.00
XJV-E2.5G22D-F7	2.5	9.5	2200	150	3.8	15	5.8	11	225.00
XJV-E3G15D-F7*	3.0	11.4	1450	100	3.0	15	6.8	11	225.00
XJV-E3G20D-F7*	3.0	11.4	2000	140	4.0	15	6.8	11	225.00
XJV-E3G22D-F7*	3.0	11.4	2200	150	4.5	15	6.8	11	225.00

OIL CAPACITY = 4.5 oz *MAXIMUM FLUID TEMPERATURE* = 140° F *INLET THREAD* = 1/2"M *DISCHARGE THREAD* = 3/8"M

XJW-E 3400 RPM D VERSION - 7/8" WITH VERTICAL GAS ENGINE FLANGE (F27)

XJW-E2G22D-F27	2.0	7.6	2200	150	3.0	15	4.8	11	$225.00
XJW-E2.5G22D-F27*	2.5	9.5	2200	150	3.7	15	5.8	11	225.00
XJW-E3G22D-F27	3.0	11.4	2200	150	4.5	15	6.8	11	225.00

OIL CAPACITY = 4.5 oz *MAXIMUM FLUID TEMPERATURE* = 140° F *INLET THREAD* = 1/2"M *DISCHARGE THREAD* = 3/8"M

Special Note: Use only AR64545 for the XJ/SJ/BK Series pumps only: Do NOT change oil. Use oil only to add if low. This oil is a specially formulated synthetic with special additives for the demands of the XJ, SJ and BK pump series. No other oil is factory approved for these pumps, and could result in pump failure.

*Available upon special request (non-stock).

FEATURING

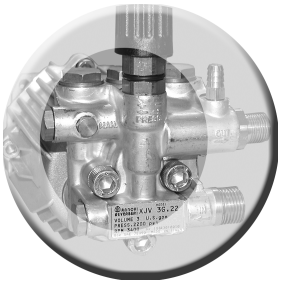

MANIFOLD: High strength forged brass for long term use.
BOLTS: Three 8mm grade 8.8.

PISTONS: Ceramic coated stainless steel for longer pump life in harsh environments.

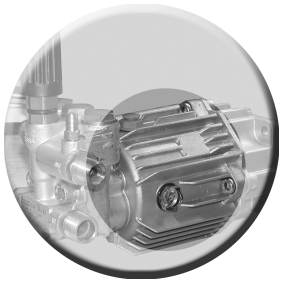

CRANKCASE: Precision die-cast, large cooling fins for maximum heat dissipation. Sight glass, fill and drain plugs.

BEARINGS: Angular contact ball bearing stabilizes the crankshaft and one thrust needle bearing absorbs the plunger load and assure long radial plate life. All of the thrust plates are made of heat treated hardened steel for extended life.

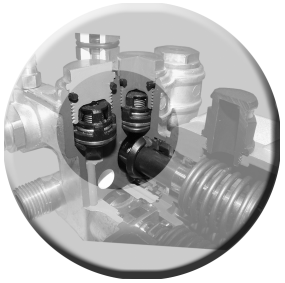

VALVES, SEATS, and ***SPRINGS:*** Stainless steel with specially designed Ultra Form cages provide long life and positive seating.

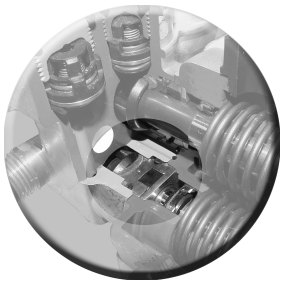

SEALS and ***V-PACKINGS:*** Continuously lubricating for extended life.

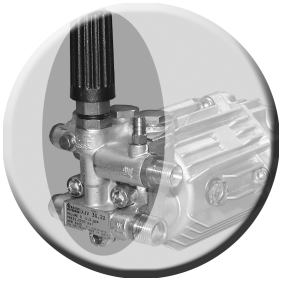

UNLOADER: Built in to optimize performance while reducing setup time. Integral trap pressure, fixed or adjustable chemical injector.

SJV D VERSION + F7

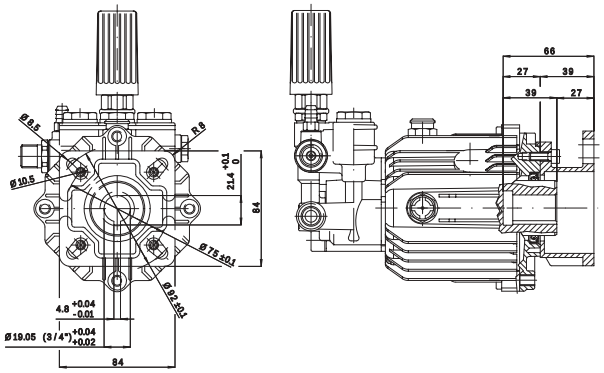

SJW D VERSION + F27

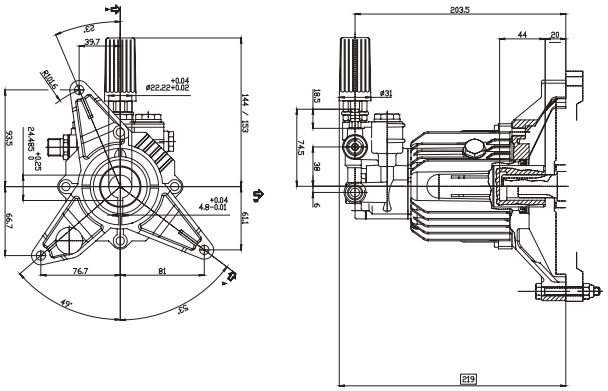

SJW D VERSION + F27

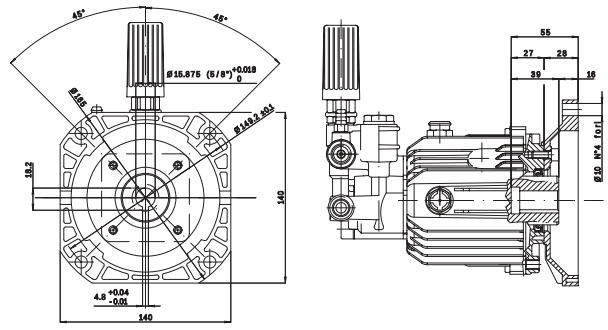

* Measurements are in Metric

SJV & SJW & XJV - Super Duty Axial Radial Drive Pumps

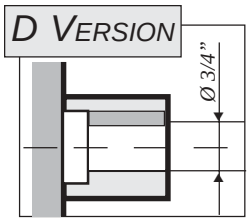

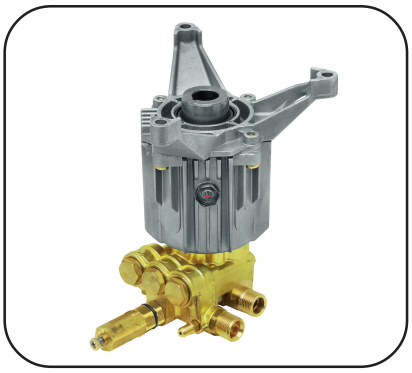

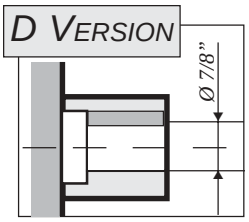

SJV 3400 RPM D Version - 3/4” with Gas Engine Flange (F7)

Model	Max. GPM	Max. LMP	Max. PSI	Max. Bar	Power EBHP	Bore Dia. mm	Stroke mm	Weight Lbs.	List Price
SJV2G25D-F7*	2.0	7.6	2500	170	3.5	15	4.8	11	$275.00
SJV2.5G24D-F7	2.5	9.5	2500	170	4.5	15	5.8	11	275.00
SJV3G25D-F7	3.0	11.4	2500	170	5.0	15	6.8	11	275.00

Oil Capacity = 4.5 oz *Maximum Fluid Temperature* = 140° F *Inlet Thread* = 1/2”M *Discharge Thread* = 3/8”M

SJW 3400 RPM D Version - 7/8” with Vertical Gas Engine Flange (F27)

SJW2G25D-F27*	2.0	7.6	2500	170	3.5	15	4.8	11	$285.00
SJW2.5G25D-F27	2.5	9.5	2500	170	4.5	15	5.8	11	285.00
SJW3G25D-F27	3.0	11.4	2500	170	5.0	15	6.8	11	285.00

Oil Capacity = 4.5 oz *Maximum Fluid Temperature* = 140° F *Inlet Thread* = 1/2”M *Discharge Thread* = 3/8”M

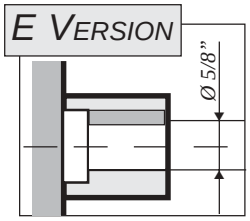

XJV 3400 RPM E Version - 5/8” with NEMA 56-C Flange (F8)

XJV2G15E-F8	2.0	7.6	1450	100	2.0	15	4.8	11	$285.00
XJV3G20E-F8	3.0	11.4	2000	140	4.0	15	6.8	11	285.00

Oil Capacity = 4.5 oz *Maximum Fluid Temperature* = 140° F *Inlet Thread* = 1/2”M *Discharge Thread* = 3/8”M

Special Note: Use only AR64545 for the XJ/SJ/BK Series pumps only: Do NOT change oil. Use oil only to add if low. This oil is a specially formulated synthetic with special additives for the demands of the XJ, SJ and BK pump series. No other oil is factory approved for these pumps, and could result in pump failure.

*Available upon special request (non-stock).

FEATURING

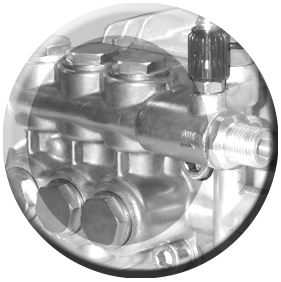

MANIFOLD: High strength forged brass for long term use.
BOLTS: Four 10mm grade 8.8.

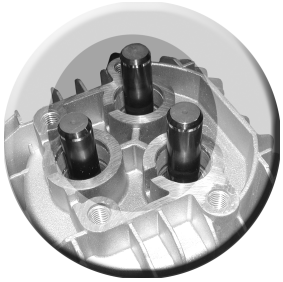

PISTONS: Ceramic coated stainless steel for longer pump life in harsh environments.

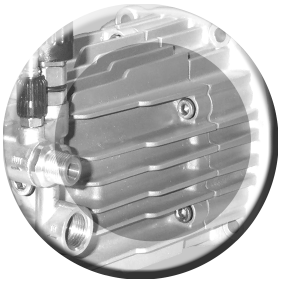

CRANKCASE: Precision die-cast, large cooling fins for maximum heat dissipation.

BEARINGS: Oversized for maximum life and load disbursement, a large angular contact ball bearing stabilizes the crankshaft and one thrust bearing absorbs the plunger load to assure long radial plate life. All of the thrust plates are made of heat treated hardened steel for extended use hours.

VALVES, SEATS, and ***SPRINGS:*** Stainless steel with specially designed Ultra Form material valve cages that are impervious to water absorption and provide long life and positive seating.

SEALS and ***V-PACKINGS:*** Continuously lubricating for extended life.

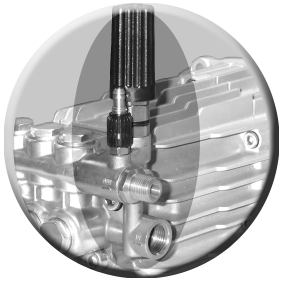

UNLOADER: Built in manifold of pump to optimize performance while reducing setup time. Integral trap pressure, fixed or adjustable chemical injector.

BKV D VERSION

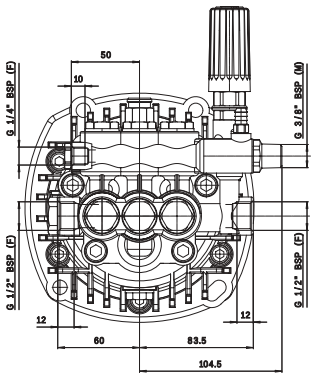

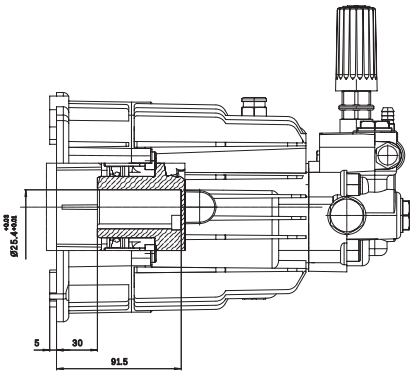

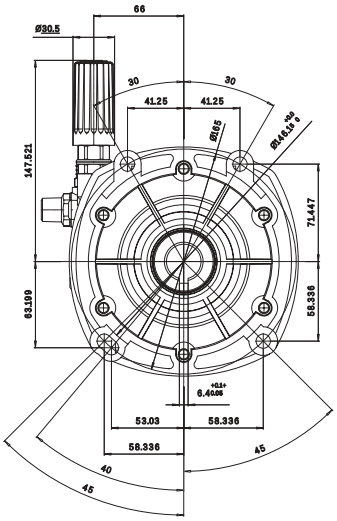

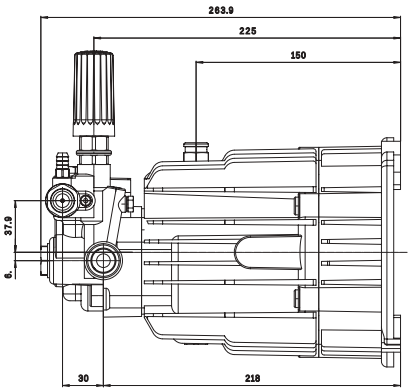

* Measurements are in Metric

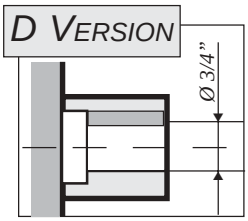

NEW

BKV 3400 RPM D VERSION - 1" WITH GAS ENGINE FLANGE SEA J609A

MODEL	MAX. GPM	MAX. LMP	MAX. PSI	MAX. BAR	POWER EBHP	BORE DIA. MM	STROKE MM	CRANKSHAFT ID STAMP	WEIGHT LBS.	LIST PRICE
BKV3G30D*	3.0	11.4	3000	205	6.2	15	7.6	8	21.6	$390.00
BKV3.5G30D*	3.5	13.2	3000	205	7.2	15	8.55	9	21.6	390.00
BKV4G30D*	4.0	15.1	3000	205	8.2	15	9.52	10	21.6	390.00

OIL CAPACITY = 9.5 OZ *MAXIMUM FLUID TEMPERATURE* = 140° F *INLET THREAD* = 1/2"F *DISCHARGE THREAD* = 3/8"M

Special Note: Use only AR64545 for the XJ/SJ/BK Series pumps only: Do NOT change oil. Use oil only to add if low. This oil is a specially formulated synthetic with special additives for the demands of the XJ, SJ and BK pump series. No other oil is factory approved for these pumps, and could result in pump failure.

*Available upon special request (non-stock).

FEATURING

MANIFOLD: High strength forged brass for long term use.
BOLTS: Six 6mm grade 12.9.

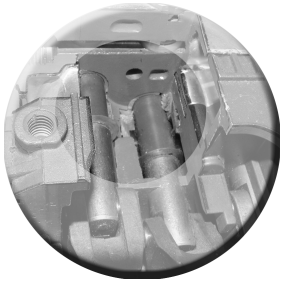

PLUNGERS: A special thick solid ceramic for long life, strong durability and more resilience.

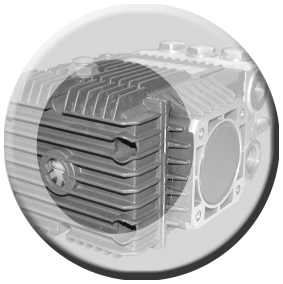

CRANKCASE: Precision die-cast, large cooling fins and anodized for maximum heat dissipation. Sight glass, fill and drain plugs.

BEARINGS: Oversized for maximum life and load disbursement, 2 ball bearings on the solid shaft series and a needle bearing on the drive side and ball on the non-drive side for the hollow shaft series. Each bearing is held in position on the crankshaft and crankcase by snap rings. This assures positive alignment and centering of the connecting rods and crankshaft in relation to the crankcase, it also eliminates the crankshaft from floating.

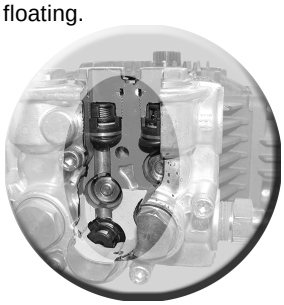

VALVES, SEATS, and ***SPRINGS:*** Stainless steel with specially designed Ultra Form material valve cages that are impervious to water absorption and provide long life and positive seating.

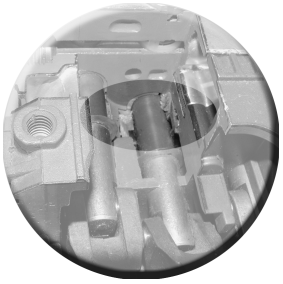

SEALS and ***V-PACKINGS:*** Continuously lubricating for extended life.

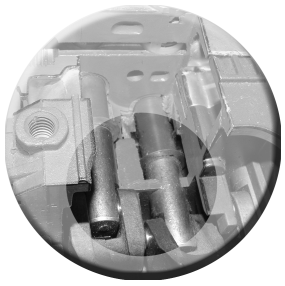

PLUNGER RODS: High strength stainless steel.

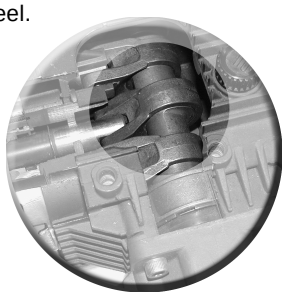

CONNECTING RODS: One piece special alloy aluminum based and bronze (+1800PSI) oversized for maximum strength, load disbursement, and long life. Heavy pin area construction, for added load strength.

XT / XTA / XTV N VERSION

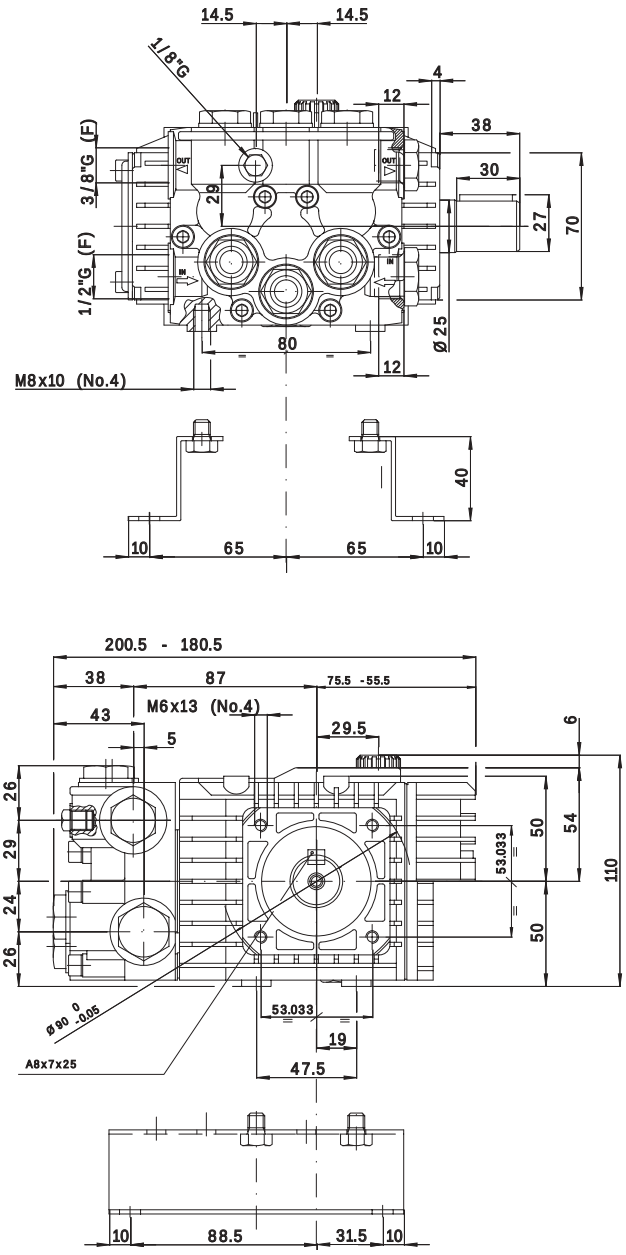

* Measurements are in Metric

XT / XTA / XTV - Triplex Plunger Pumps

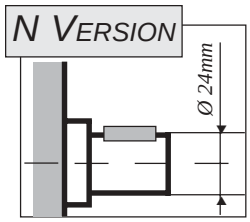

XT 1450 RPM N Version - 24mm Solid Shaft

Model	Max. GPM	Max. LMP	Max. PSI	Max. Bar	Power EBHP	Bore Dia. mm	Stroke mm	Crankshaft ID Stamp	Weight Lbs.	List Price
XT8.14N	2.11	8.0	2000	140	3.0	15	11.0	6	11	$310.00
XT9.14N	2.37	9.0	2000	140	3.3	18	8.4	4	11	310.00
XT11.11N*	2.90	11.0	1600	110	3.0	18	11.0	6	11	280.00
XT11.14N*	2.90	11.0	2000	140	4.0	18	11.0	6	11	310.00

Oil Capacity = <1740 PSI = 8 oz, >1740 PSI = 10 oz *Maximum Fluid Temperature* = 140° F *Inlet Thread* = 1/2"F *Discharge Thread* = 3/8"F

XTA 1750 RPM N Version - 24mm Solid Shaft

XTA2G15N*	2.11	8.0	1450	100	2.0	15	9.6	5	8.5	$245.00
XTA2G15NBA	2.11	8.0	2000	140	3.0	15	9.6	5	10	285.00
XTA2G20N	2.11	8.0	2000	140	3.0	15	9.6	5	11	305.00
XTA2G22N*	2.11	8.0	2200	150	3.0	15	9.6	5	11	305.00
XTA3G10N*	3.0	11.4	1000	69	2.0	18	9.6	5	8.5	260.00
XTA3G16N	3.0	11.4	1600	110	3.0	18	9.6	5	10	295.00
XTA3G19N	3.0	11.4	1900	130	4.0	18	9.6	5	11	315.00
XTA3G22N	3.0	11.4	2200	150	4.5	18	9.6	5	11	315.00

Oil Capacity = <1740 PSI = 8 oz, >1740 PSI = 10 oz *Maximum Fluid Temperature* = 140° F *Inlet Thread* = 1/2"F *Discharge Thread* = 3/8"F

XTV 3400 RPM N Version - 24mm Solid Shaft

XTV3G10N*	3.0	11.4	1000	69	2.0	15	7.2	C	9	$265.00
XTV3G16N	3.0	11.4	1600	110	3.0	15	7.2	C	10	305.00
XTV3G20N	3.0	11.4	2000	140	4.0	15	7.2	C	11	325.00
XTV3G22N	3.0	11.4	2200	150	4.5	15	7.2	C	11	325.00

Oil Capacity = <1740 PSI = 8 oz, >1740 PSI = 10 oz *Maximum Fluid Temperature* = 140° F *Inlet Thread* = 1/2"F *Discharge Thread* = 3/8"F

Rail Kits

AR1836	1/2"	$12.60
AR1836H	1-5/8"	16.80

*Available upon special request (non-stock).

FEATURING

MANIFOLD: High strength forged brass for long term use.
BOLTS: Six 6mm grade 12.9.

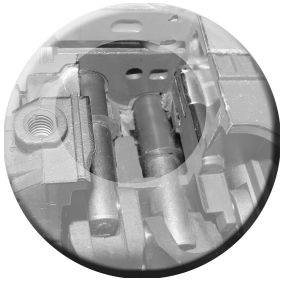

PLUNGERS: A special thick solid ceramic for long life, strong durability and more resilience.

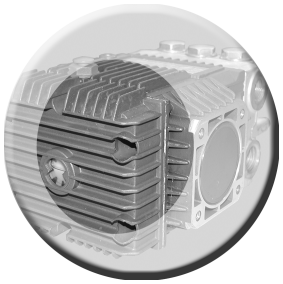

CRANKCASE: Precision die-cast, large cooling fins and anodized for maximum heat dissipation. Sight glass, fill and drain plugs.

BEARINGS: Oversized for maximum life and load disbursement, 2 ball bearings on the solid shaft series and a needle bearing on the drive side and ball on the non-drive side for the hollow shaft series. Each bearing is held in position on the crankshaft and crankcase by snap rings. This assures positive alignment and centering of the connecting rods and crankshaft in relation to the crankcase, it also eliminates the crankshaft from floating.

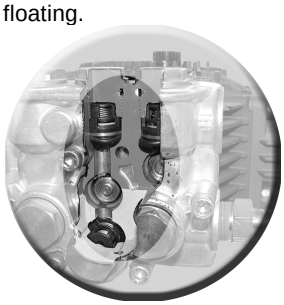

VALVES, SEATS, and ***SPRINGS:*** Stainless steel with specially designed Ultra Form material valve cages that are impervious to water absorption and provide long life and positive seating.

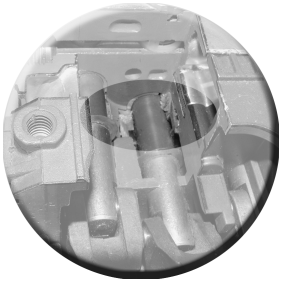

SEALS and ***V-PACKINGS:*** Continuously lubricating for extended life.

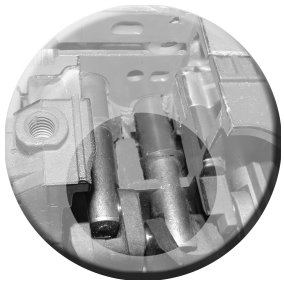

PLUNGER RODS: High strength stainless steel

CONNECTING RODS: One piece special alloy aluminum based and bronze (+1800PSI) oversized for maximum strength, load disbursement, and long life. Heavy pin area construction, for added load strength.

XTA / XTV E VERSION + F8

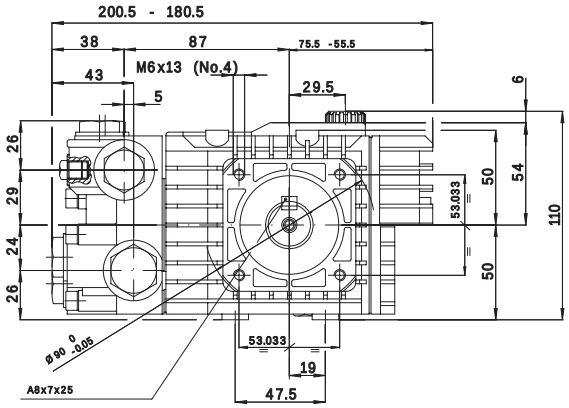

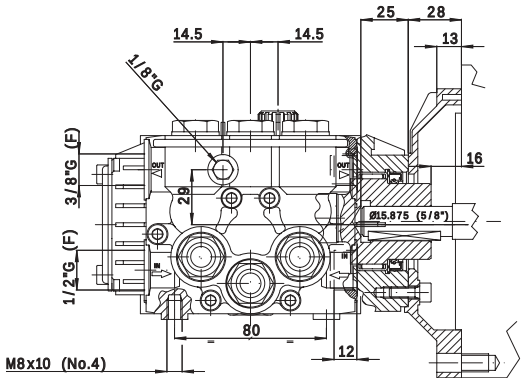

XTV D VERSION + F7

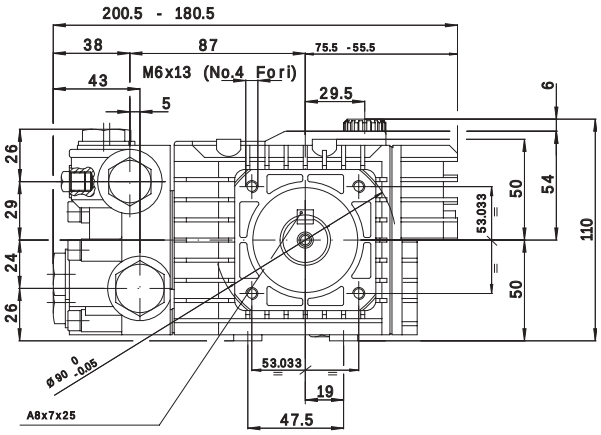

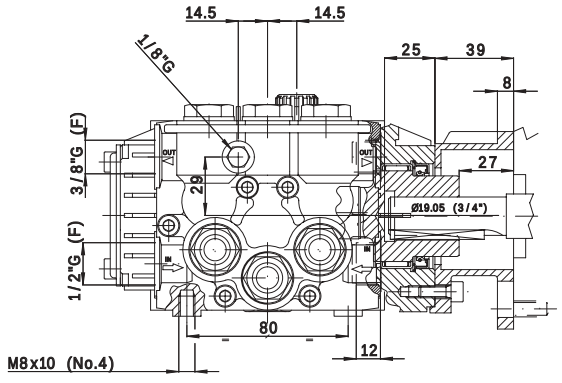

* Measurements are in Metric

XTA / XTV - Triplex Plunger Pumps

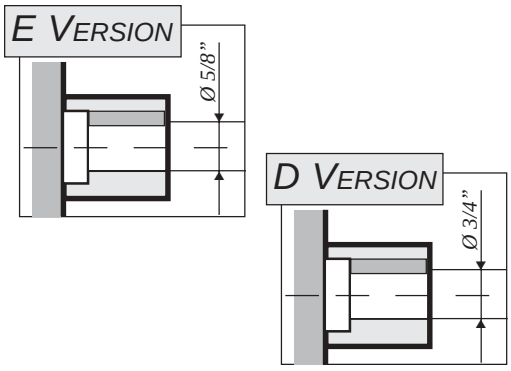

XTA 1750 RPM E VERSION - 5/8” WITH NEMA 56 - C FLANGE (F8)

MODEL	MAX. GPM	MAX. LMP	MAX. PSI	MAX. BAR	POWER EBHP	BORE DIA. MM	STROKE MM	CRANKSHAFT ID STAMP	WEIGHT LBS.	LIST PRICE
XTA2G15E-F8	2.11	8.0	1450	100	2.0	15	9.6	5	8.5	$290.00
XTA2G15EBA-F8	2.11	8.0	1800	124	2.5	15	9.6	5	10	320.00
XTA2G22E-F8	2.11	8.0	2200	152	3.0	15	9.6	5	11	340.00
XTA3G10E-F8	3.0	11.4	1000	70	2.0	18	9.6	5	8.5	295.00
XTA3G16EBA-F8	3.0	11.4	1600	110	3.0	18	9.6	5	10	335.00
XTA3G19E-F8	3.0	11.4	1900	130	4.0	18	9.6	5	11	350.00
XTA3G22E-F8	3.0	11.4	2200	152	4.5	18	9.6	5	11	350.00
XTA3.5G10E-F8*	3.5	13.1	1000	69	2.5	18	11.0	6	8.5	295.00
XTA3.5G13E-F8*	3.5	13.1	1300	90	3.0	18	11.0	6	10	335.00
XTA3.5G17E-F8*	3.5	13.1	1740	120	4.0	18	11.0	6	11	355.00
XTA3.5G20E-F8*	3.5	13.1	1000	69	2.5	18	11.0	6	11	355.00
XTA4G10E-F8*	4.0	15.0	1000	69	3.0	18	12.8	7	8.5	295.00
XTA4G15EBA-F8	4.0	15.0	1500	103	4.0	18	12.8	7	11	355.00

OIL CAPACITY = <1740 PSI = 8 oz, >1740 PSI = 10 oz *MAXIMUM FLUID TEMPERATURE* = 140° F *INLET THREAD* = 1/2”F *DISCHARGE THREAD* = 3/8”F

XTV 3400 RPM E VERSION - 5/8” WITH NEMA 56 - C FLANGE (F8)

XTV2G15E-F8*	2.11	8.0	1500	103	2.0	15	4.8	D	9	$280.00
XTV2G15EBA-F8	2.11	8.0	1500	103	2.0	15	4.8	D	10	310.00
XTV2G20E-F8	2.11	8.0	2000	140	3.0	15	4.8	D	11	330.00
XTV2G22E-F8*	2.11	8.0	2200	150	3.0	15	4.8	D	11	330.00
XTV3G10E-F8*	3.0	11.4	1000	69	2.0	15	7.2	C	9	280.00
XTV3G16E-F8	3.0	11.4	1600	110	3.0	15	7.2	C	10	315.00
XTV3G20E-F8	3.0	11.4	2000	140	4.0	15	7.2	C	11	330.00
XTV3G22E-F8	3.0	11.4	2200	150	4.5	15	7.2	C	11	330.00

OIL CAPACITY = <1740 PSI = 8 oz, >1740 PSI = 10 oz *MAXIMUM FLUID TEMPERATURE* = 140° F *INLET THREAD* = 1/2”F *DISCHARGE THREAD* = 3/8”F

XTV 3400 RPM D VERSION - 3/4” WITH GAS ENGINE FLANGE (F7)

XTV2G15D-F7	2.11	8.0	1500	103	2.0	15	4.8	D	9	$280.00
XTV2G15DBA-F7	2.11	8.0	1500	103	2.0	15	4.8	D	10	315.00
XTV2G20D-F7*	2.11	8.0	2000	140	3.0	15	4.8	D	10	330.00
XTV2G22D-F7*	2.11	8.0	2200	150	3.0	15	4.8	D	10	330.00
XTV3G10D-F7*	3.0	11.4	1000	69	2.0	15	7.2	C	9	280.00
XTV3G16D-F7	3.0	11.4	1600	110	3.0	15	7.2	C	10	315.00
XTV3G20D-F7	3.0	11.4	2000	140	4.5	15	7.2	C	11	330.00
XTV3G22D-F7	3.0	11.4	2200	150	4.5	15	7.2	C	11	330.00

OIL CAPACITY = <1740 PSI = 8 oz, >1740 PSI = 10 oz *MAXIMUM FLUID TEMPERATURE* = 140° F *INLET THREAD* = 1/2”F *DISCHARGE THREAD* = 3/8”F

*Available upon special request (non-stock).

FEATURING

MANIFOLD: High strength forged brass for long term use.
BOLTS: Eight 6mm grade 12.9.

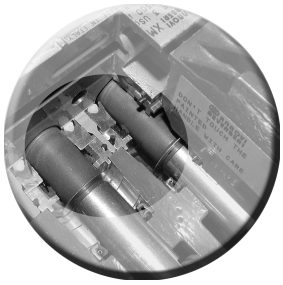

PLUNGERS: A special thick solid ceramic for long life, strong durability and more resilience.

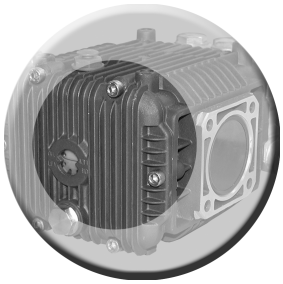

CRANKCASE: Precision die-cast, large cooling fins and anodized for maximum heat dissipation. Sight glass, fill and side and bottom drain plugs.

BEARINGS: Oversized for maximum life and load disbursement, needle bearing on the drive side and ball on the non-drive side. Each bearing is held in position on the crankshaft and crankcase by snap rings. This assures positive alignment and centering of the connecting rods and crankshaft in relation to the crankcase, it also eliminates the crankshaft from floating.

VALVES, SEATS, and ***SPRINGS:*** Stainless steel with specially designed Ultra Form material valve cages that are impervious to water absorption and provide long life and positive seating.

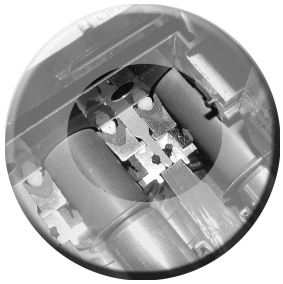

SEALS and ***V-PACKINGS:*** Continuously lubricating for extended life.

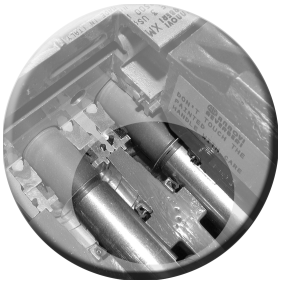

PLUNGER RODS: High strength stainless steel.

CONNECTING RODS: One piece special alloy aluminum based, oversized for maximum strength, load disbursement, and long life. Heavy pin area construction, for added load strength.

XM / XMA N VERSION

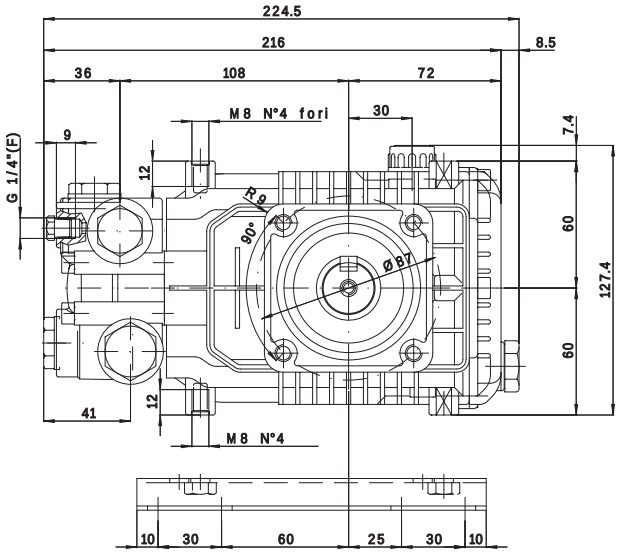

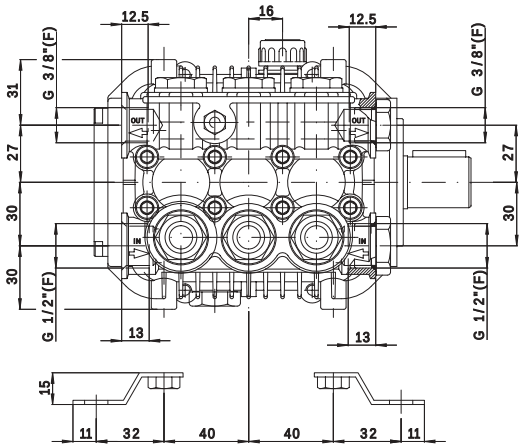

* Measurements are in Metric

XM / XMA - Triplex Plunger Pumps

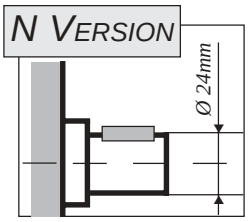

XM 1450 RPM N VERSION - 24MM SOLID SHAFT

MODEL	MAX. GPM	MAX. LMP	MAX. PSI	MAX. BAR	POWER EBHP	BORE DIA. MM	STROKE MM	CRANKSHAFT ID STAMP	WEIGHT LBS.	LIST PRICE
XM11.17N	2.9	11.0	2500	170	5.0	15	15.4	1	14	$330.00
XM13.17N*	3.43	13.0	2500	170	5.5	18	12.4	4	14	330.00
XM15.15N	3.96	15.0	2200	150	5.5	18	14.2	2	14	330.00

OIL CAPACITY = 14.5 oz *MAXIMUM FLUID TEMPERATURE* = 140° F *INLET THREAD* = 1/2"F *DISCHARGE THREAD* = 3/8"F

XMA 1750 RPM N VERSION - 24MM SOLID SHAFT

XMA3G25N	3.0	11.4	2500	170	5.0	15	13.2	3	14	$330.00
XMA3.5G22N	3.5	13.2	2200	150	5.0	15	15.4	1	14	330.00
XMA3.5G25N	3.5	13.2	2500	170	5.5	15	15.4	1	14	330.00
XMA4G20N	4.0	15.1	2000	140	5.5	18	13.2	3	14	330.00

OIL CAPACITY = 14.5 oz *MAXIMUM FLUID TEMPERATURE* = 140° F *INLET THREAD* = 1/2"F *DISCHARGE THREAD* = 3/8"F

RAIL KITS

AR2729	5/8"	$8.40
AR2633H	2-5/8"	22.05

*Available upon special request (non-stock).

FEATURING

MANIFOLD: High strength forged brass for long term use.
BOLTS: Eight 6mm grade 12.9.

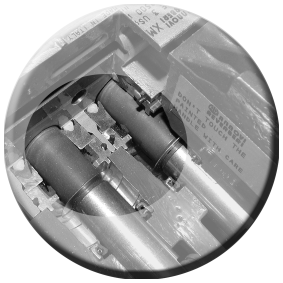

PLUNGERS: A special thick solid ceramic for long life, strong durability and more resilience.

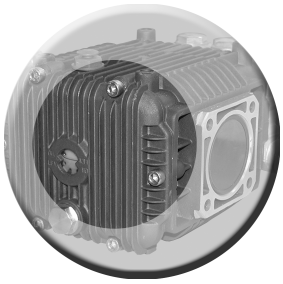

CRANKCASE: Precision die-cast, large cooling fins and anodized for maximum heat dissipation. Sight glass, fill and side and bottom drain plugs.

BEARINGS: Oversized for maximum life and load disbursement, needle bearing on the drive side and ball on the non-drive side. Each bearing is held in position on the crankshaft and crankcase by snap rings. This assures positive alignment and centering of the connecting rods and crankshaft in relation to the crankcase, it also eliminates the crankshaft from floating.

VALVES, SEATS, and ***SPRINGS:*** Stainless steel with specially designed Ultra Form cages to provide extra long life and positive seating.

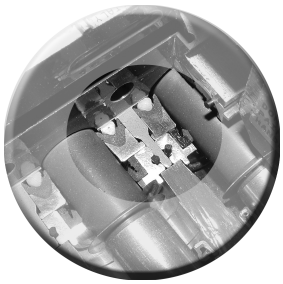

SEALS and ***V-PACKINGS:*** Continuously lubricating for extended life.

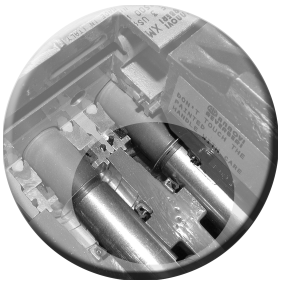

PLUNGER RODS: High strength stainless steel.

CONNECTING RODS: One piece special alloy aluminum based (SXM series has bronze rods), oversized for maximum strength, load disbursement, and long life. Heavy pin area construction, for added load strength.

XMA / XMV E VERSION + F17

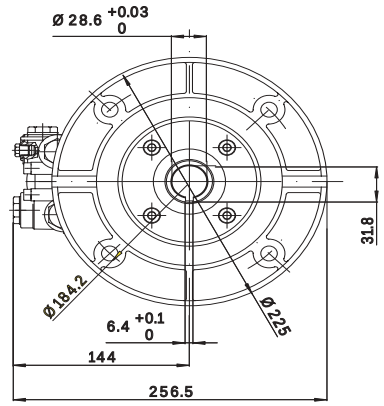

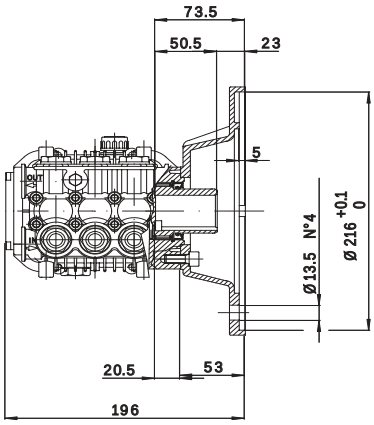

XMA / XMV E VERSION + F33

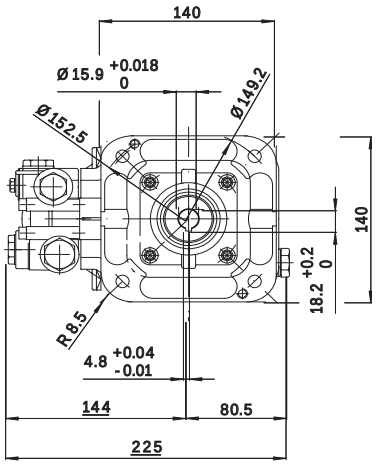

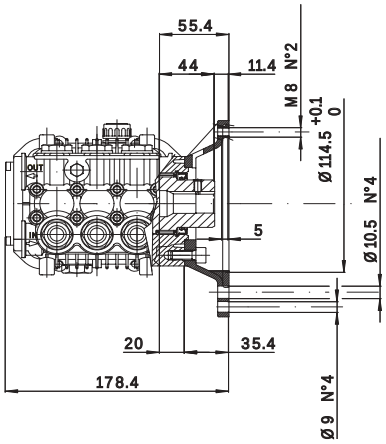

* Measurements are in Metric

XMA / XMV / SXMA - Triplex Plunger Pumps

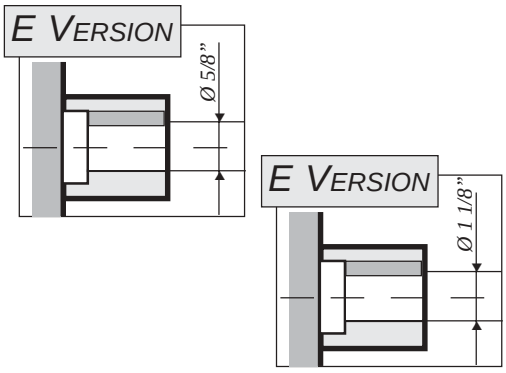

XMA 1750 RPM E Version - 5/8" with NEMA 56-C Flange (F33)

Model	Max. GPM	Max. LMP	Max. PSI	Max. Bar	Power EBHP	Bore Dia. mm	Stroke mm	Crankshaft ID Stamp	Weight Lbs.	List Price
XMA2G15E-F33	2.11	8.0	1500	105	2.0	15	9.4	7	15	$380.00
XMA2G22E-F33	2.11	8.0	2200	150	3.0	15	9.4	7	15	380.00
XMA2.5G18E-F33	2.5	9.5	1800	120	3.0	15	10.6	5	15	380.00
XMA3G18E-F33*	3.0	11.4	1800	120	4.0	15	13.2	3	15	380.00

Oil Capacity = 14.5 oz *Maximum Fluid Temperature* = 140° F *Inlet Thread* = 1/2"F *Discharge Thread* = 3/8"F

XMA 1750 RPM E Version - 1 1/8" with NEMA 182-184 Flange (F17)

XMA3G25E-F17	3.0	11.4	2500	170	5.0	15	13.2	3	15	$460.00
XMA3G30E-F17	3.0	11.4	3000	206	6.2	15	13.2	3	15	460.00
XMA3.5G25E-F17	3.5	13.2	2500	170	5.5	15	15.4	1	15	460.00

Oil Capacity = 14.5 oz *Maximum Fluid Temperature* = 140° F *Inlet Thread* = 1/2"F *Discharge Thread* = 3/8"F

XMV 3400 RPM E Version - 5/8" with NEMA 56 - C Flange (F33)

XMV2G25E-F33	2.11	8.0	2500	172	5.0	15	4.8	12	15	$380.00

Oil Capacity = 14.6 oz *Maximum Fluid Temperature* = 140° F *Inlet Thread* = 1/2"F *Discharge Thread* = 3/8"F

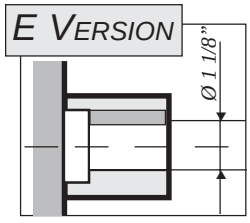

NEW

SXMA 1750 RPM E Version - 1 1/8" with NEMA 182-184 Flange (F17)

SXMA3G30E-F17	3.0	11.4	3000	205	7.5	15	13.2	3	18	$480.00
SXMA3.5G30E-F17	3.5	15.1	3000	205	7.5	15	15.4	1	18	480.00
SXMA4G30E-F17*	4.0	15.1	3000	205	10.0	18	13.2	3	18	480.00

Oil Capacity = 14.5 oz *Maximum Fluid Temperature* = 140° F *Inlet Thread* = 1/2"F *Discharge Thread* = 3/8"F

*Available upon special request (non-stock).

FEATURING

MANIFOLD: High strength forged brass for long term use.
BOLTS: Eight 6mm grade 12.9.

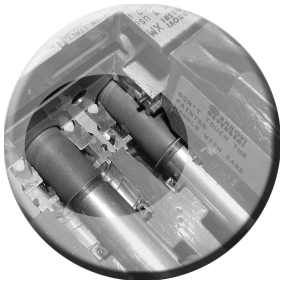

PLUNGERS: A special thick solid ceramic for long life, strong durability and more resilience.

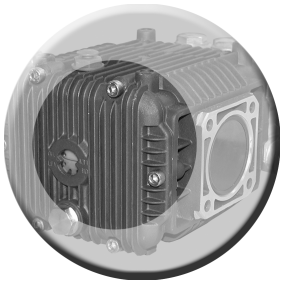

CRANKCASE: Precision die-cast, large cooling fins and anodized for maximum heat dissipation. Sight glass, fill and side and bottom drain plugs.

BEARINGS: Oversized for maximum life and load disbursement, needle bearing on the drive side and ball on the non-drive side. Each bearing is held in position on the crankshaft and crankcase by snap rings. This assures positive alignment and centering of the connecting rods and crankshaft in relation to the crankcase, it also eliminates the crankshaft from floating.

VALVES, SEATS, and ***SPRINGS:*** Stainless steel with specially designed Ultra Form cages to provide extra long life and positive seating.

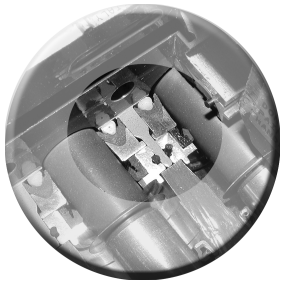

SEALS and ***V-PACKINGS:*** Continuously lubricating for extended life.

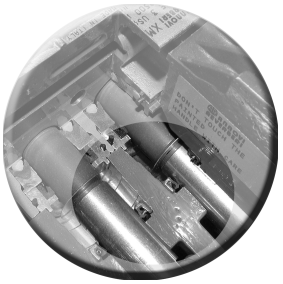

PLUNGER RODS: High strength stainless steel.

CONNECTING RODS: One piece special alloy aluminum based (SXM series has bronze rods), oversized for maximum strength, load disbursement, and long life. Heavy pin area construction, for added load strength.

XMV / SXMV D VERSION + F24

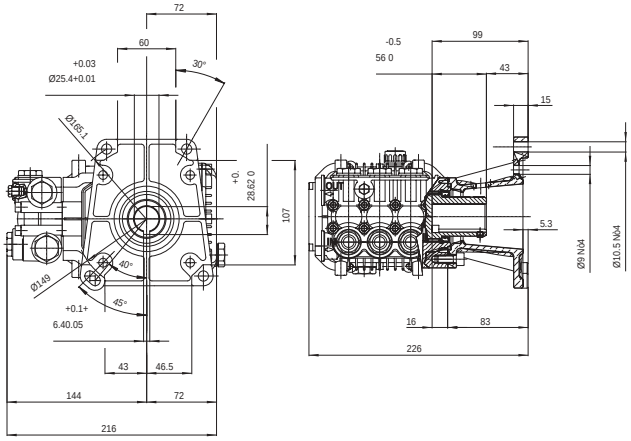

XMV D VERSION + F25

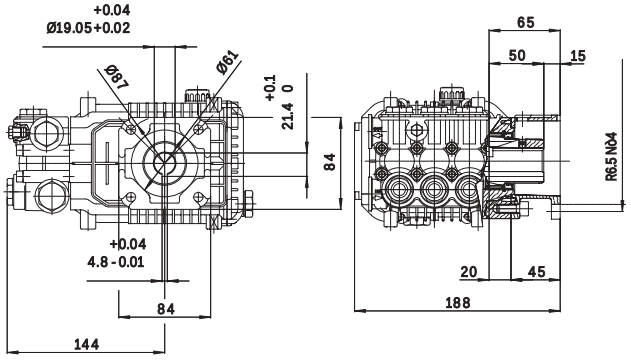

XMV D VERSION + F33

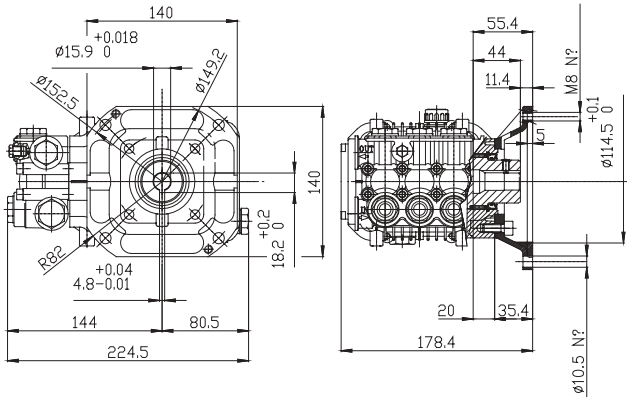

* Measurements are in Metric

XMV / SXMV - Triplex Plunger Pumps

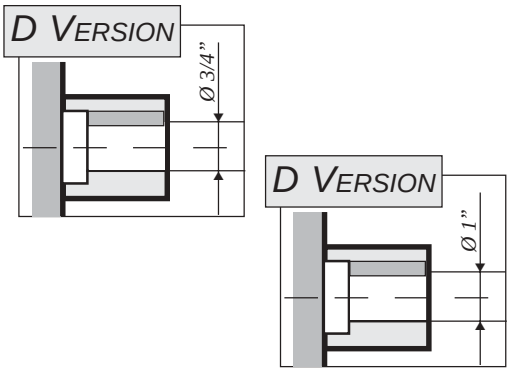

XMV 3400 RPM D Version - 3/4" with Gas Engine Flange (F25)

Model	Max. GPM	Max. LMP	Max. PSI	Max. Bar	Power EBHP	Bore Dia. mm	Stroke mm	Crankshaft ID Stamp	Weight Lbs.	List Price
XMV2.5G26D-F25	2.5	9.5	2600	179	5.0	15	6.2	10	15	$340.00
XMV3G25D-F25	3.0	11.4	2500	170	5.0	15	7.6	9	15	340.00
XMV3.5G25D-F25	3.5	13.2	2500	170	5.5	15	8.2	8	15	340.00

Oil Capacity = 14.6 oz *Maximum Fluid Temperature* = 140° F *Inlet Thread* = 1/2"F *Discharge Thread* = 3/8"F

XMV 3400 RPM D Version - 1" with Gas Engine Flange (F24)

XMV3G30D-F24	3.0	11.4	3000	205	5.5	15	7.6	9	16	$365.00
XMV3.5G25D-F24	3.5	13.2	2500	170	5.5	15	8.2	8	16	365.00
XMV3.5G30D-F24	3.5	13.2	3000	205	7.0	15	8.2	8	16	365.00
XMV4G30D-F24	4.0	15.1	3000	205	7.5	15	9.4	7	16	365.00
XMV4G32D-F24	4.0	15.1	3200	221	10.0	15	9.4	7	16	365.00

Oil Capacity = 14.6 oz *Maximum Fluid Temperature* = 140° F *Inlet Thread* = 1/2"F *Discharge Thread* = 3/8"F

XMV 3400 RPM D Version - 3/4" with NEMA 56 - C Flange (F33)

XMV3.5G25D-F33	3.5	13.2	2500	170	5.5	15	8.2	8	15	$380.00

Oil Capacity = 14.6 oz *Maximum Fluid Temperature* = 140° F *Inlet Thread* = 1/2"F *Discharge Thread* = 3/8"F

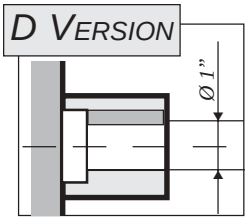

NEW

SXMV 3400 RPM D Version - 1" with Gas Engine Flange (F24)

Model	Max. GPM	Max. LMP	Max. PSI	Max. Bar	Power EBHP	Bore Dia. mm	Stroke mm	Crankshaft Number	Weight Lbs.	List Price
SXMV3G40D-F24	3.0	11.4	4000	240	7.5	15	7.6	9	16	$395.00
SXMV3.5G40D-F24	3.5	13.2	4000	240	8.5	15	8.2	8	16	395.00
SXMV4G35D-F24*	4.0	15.1	3500	240	10.0	15	9.4	7	16	395.00

Oil Capacity = 14.6 oz *Maximum Fluid Temperature* = 140° F *Inlet Thread* = 1/2"F *Discharge Thread* = 3/8"F

*Available upon special request (non-stock).

FEATURING

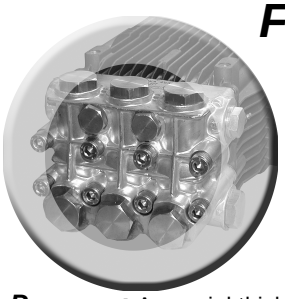

MANIFOLD: High strength forged brass or nickel plated for long term use.
BOLTS: Eight 8mm grade 8.8.

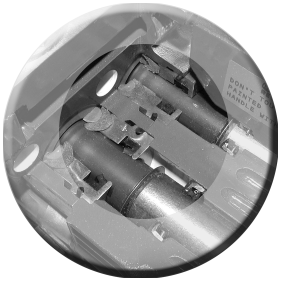

PLUNGERS: A special thick solid ceramic for long life, strong durability and more resilience.

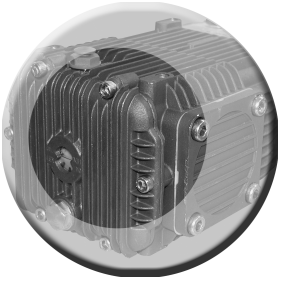

CRANKCASE: Precision die-cast, large cooling fins and anodized for maximum heat dissipation. Sight glass, fill and side and bottom drain plugs.

BEARINGS: Oversized tapered roller bearing for maximum life and load disbursement.

BEARING SUPPORT: Precision die-cast and machined to assure concentricity and alignment.

VALVES, SEATS, and ***SPRINGS:*** Stainless steel with specially designed Ultra Form cages to provide long life and positive seating.

SEALS and ***V-PACKINGS:*** Continuously lubricating for extended life.

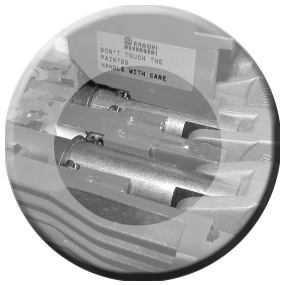

PLUNGER RODS: Stainless steel construction for strength, no plating to scrape off, back-up and o-ring plunger sealing system.

CONNECTING RODS: One piece special alloy aluminum or bronze for higher pressure, oversized for maximum strength, load disbursement, and long life. Heavy pin area construction, for added load strength.

RK / RKA N VERSION

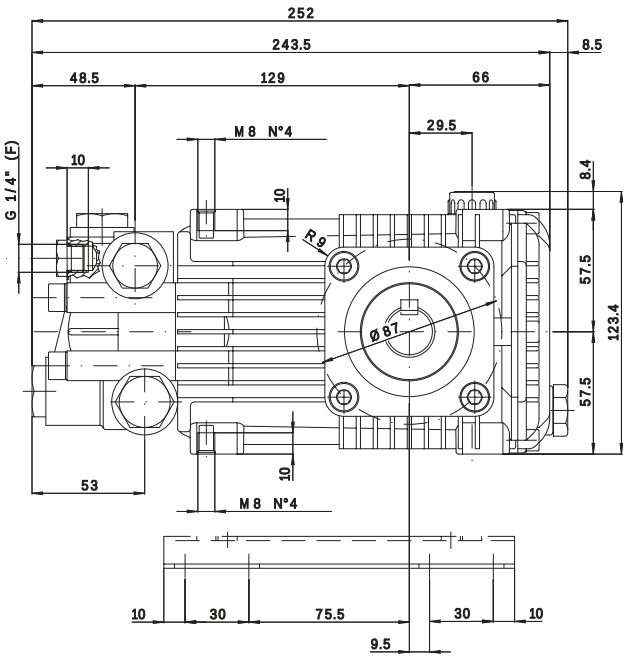

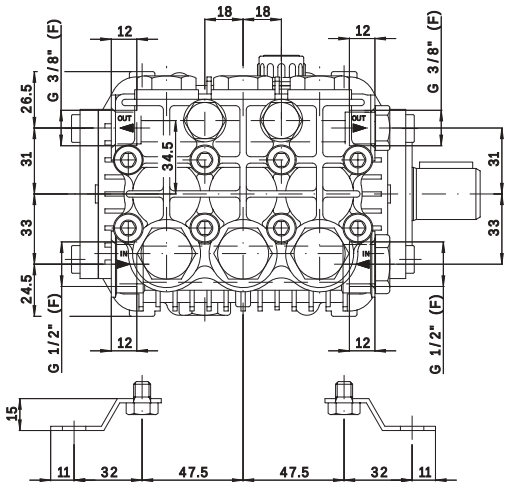

* Measurements are in Metric

RK / RKA - Triplex Plunger Pumps

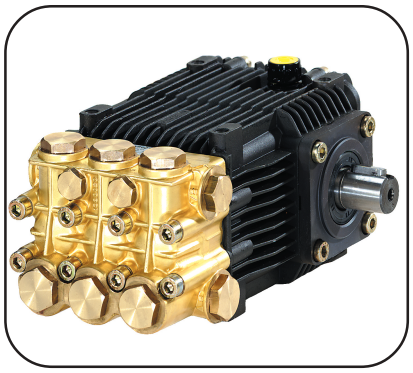

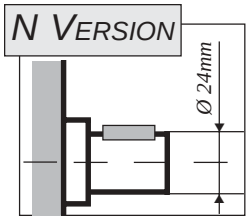

RK 1450 RPM N VERSION - 24MM SOLID SHAFT

MODEL	MAX. GPM	MAX. LMP	MAX. PSI	MAX. BAR	POWER EBHP	BORE DIA. MM	STROKE MM	CRANKSHAFT ID STAMP	WEIGHT LBS.	LIST PRICE
RK11.14N*	2.9	11	2000	140	4.0	18	10.8	5	19	$450.00
RK11.20HN*	2.9	11	2900	200	5.5	18	10.8	5	20	525.00
RK13.12N*	3.43	13	1740	120	4.0	18	12.8	3	19	450.00
RK13.20HN*	3.43	13	2900	200	7.5	18	12.8	3	20	515.00
RK14.16N*	3.7	14	2300	160	5.5	18	13.8	2	19	450.00
RK15.15N*	3.96	15	2200	150	5.5	18	14.6	1	19	450.00
RK15.20HN	3.96	15	2900	200	7.5	18	14.6	1	19	525.00
RK15.28HN	3.96	15	4000	275	11.0	18	14.6	1	20	525.00
RK18.20HN	4.75	18	2900	200	10.0	20	14.6	1	20	525.00
RK18.28HN	4.75	18	4000	275	13.0	20	14.6	1	20	525.00
RK21.20HN	5.55	21	2900	200	11.0	22	13.8	2	20	525.00

OIL CAPACITY = 15 oz *MAXIMUM FLUID TEMPERATURE* = 140° F *INLET THREAD* = 1/2"F *DISCHARGE THREAD* = 3/8"F

RKA 1750 RPM N VERSION - 24MM SOLID SHAFT

RKA3.5G25N	3.5	13.2	2500	170	5.0	18	10.8	5	19	$450.00
RKA3.5G30N	3.5	13.2	3000	205	7.5	18	10.8	5	19	500.00
RKA3.5G40HN	3.5	13.2	4000	275	10.0	18	10.8	5	20	515.00
RKA4G20N	4.0	15.1	2000	140	5.0	18	12.0	4	19	450.00
RKA4G30N	4.0	15.1	3000	205	7.5	18	12.0	4	19	500.00
RKA4G30HN	4.0	15.1	3000	205	7.5	18	12.0	4	19	525.00
RKA4G35N	4.0	15.1	3500	241	10.0	18	12.0	4	20	525.00
RKA4G40HN	4.0	15.1	4000	275	11.0	18	12.0	4	19	525.00
RKA4.5G17N*	4.5	17.0	1700	115	5.0	18	13.8	2	19	500.00
RKA4.5G25HN*	4.5	17.0	2500	170	7.5	18	13.8	2	20	525.00
RKA4.5G35HN	4.5	17.0	3500	241	11.0	18	13.8	2	19	525.00
RKA5.5G13N*	5.5	20.8	1300	90	5.0	20	13.8	2	19	450.00
RKA5.5G20HN*	5.5	20.8	2000	138	7.5	20	13.8	2	20	500.00
RKA5.5G30HN	5.5	20.8	3000	205	11.0	20	13.8	2	20	525.00
RKA6.5G20HN*	6.6	25.0	2000	138	9.0	22	13.8	2	20	525.00
RKA7G20HN	7.1	27.0	2000	138	10.0	22	14.6	1	20	525.00

OIL CAPACITY = 15 oz *MAXIMUM FLUID TEMPERATURE* = 140° F *INLET THREAD* = 1/2"F *DISCHARGE THREAD* = 3/8"F

RAIL KITS

AR1837	5/8"	$12.60
AR2633	1-3/4"	16.80
AR2633H	2-5/8"	22.05

*Available upon special request (non-stock).

FEATURING

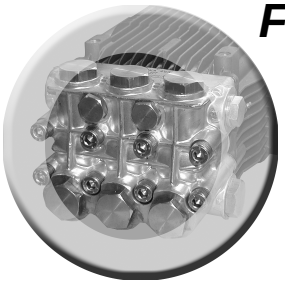

MANIFOLD: High strength forged brass or nickel plated for long term use.
BOLTS: Eight 8mm grade 8.8.

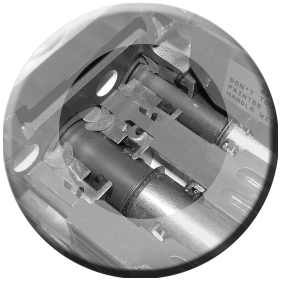

PLUNGERS: A special thick solid ceramic for long life, strong durability and more resilience.

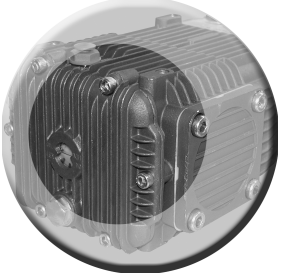

CRANKCASE: Precision die-cast, large cooling fins and anodized for maximum heat dissipation. Sight glass, fill and side and bottom drain plugs.

BEARINGS: Oversized tapered roller bearing for maximum life and load disbursement.

BEARING SUPPORT: Precision die-cast and machined to assure concentricity and alignment.

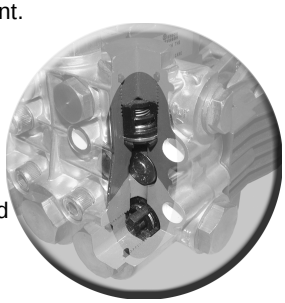

VALVES, SEATS, and ***SPRINGS:*** Stainless steel with specially designed Ultra Form cages to provide long life and positive seating.

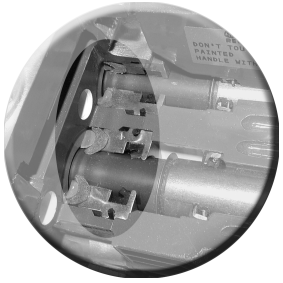

SEALS and ***V-PACKINGS:*** Continuously lubricating for extended life.

PLUNGER RODS: Stainless steel construction for strength, no plating to scrape off, back-up and o-ring plunger sealing system.

CONNECTING RODS: One piece special alloy aluminum or bronze for higher pressure, oversized for maximum strength, load disbursement, and long life. Heavy pin area construction, for added load strength.

RKA E VERSION + F17

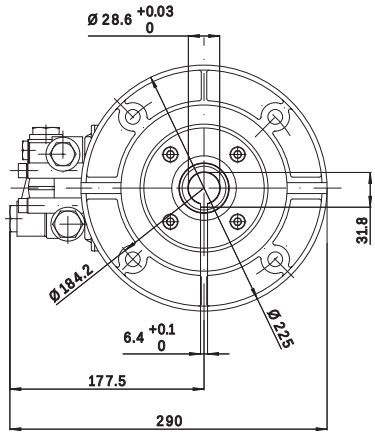

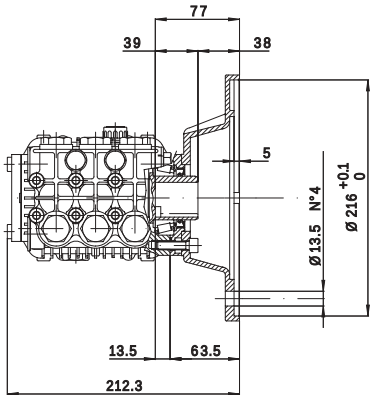

RKV D VERSION + F24

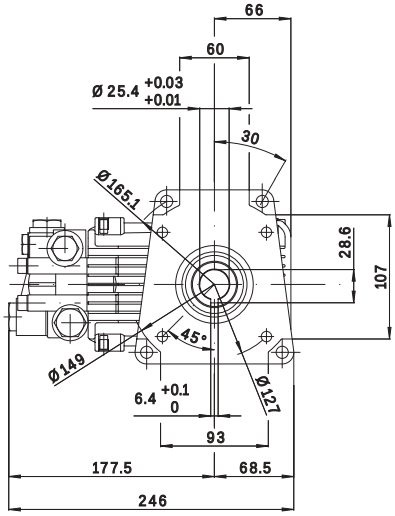

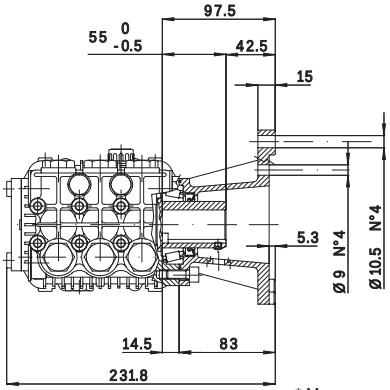

* Measurements are in Metric

RKA / RKV - Triplex Plunger Pumps

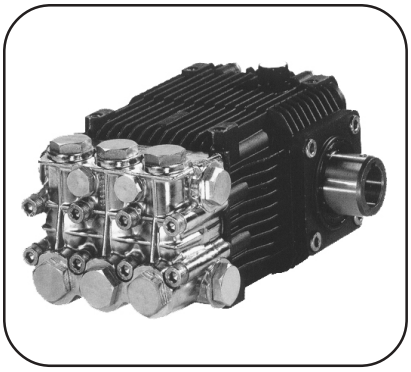

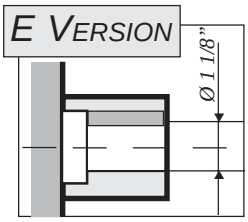

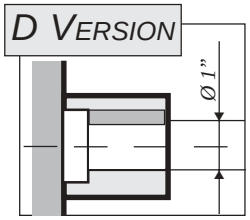

RKA 1750 RPM E Version - 1 1/8” with NEMA 182-184 Flange (F17)

Model	Max. GPM	Max. LMP	Max. PSI	Max. Bar	Power EBHP	Bore Dia. mm	Stroke mm	Crankshaft ID Stamp	Weight Lbs.	List Price
RKA3.5G30E-F17	3.5	13.2	3000	205	7.5	18	10.8	5	22	$575.00
RKA3.5G30HE-F17*	3.5	13.2	3000	205	7.5	18	10.8	5	22	650.00
RKA3.5G40HE-F17	3.5	13.2	4000	275	9.6	18	10.8	5	22	650.00
RKA4G20E-F17	4.0	15.1	2000	140	5.0	18	12.0	4	21	575.00
RKA4G30E-F17	4.0	15.1	3000	205	7.5	18	12.0	4	21	575.00
RKA4G30HE-F17	4.0	15.1	3000	205	7.5	18	12.0	4	21	650.00
RKA5.5G13E-F17	5.5	20.8	1300	90	5.0	20	13.8	2	21	645.00
RKA6.5G20HE-F17*	6.6	25.0	2000	138	9.0	22	13.8	2	21	650.00
RKA7G20HE-F17	7.1	27.0	2000	138	10.0	22	14.6	1	21	650.00

Oil Capacity = 15 oz *Maximum Fluid Temperature* = 140° F *Inlet Thread* = 1/2”F *Discharge Thread* = 3/8”F

RKV 3400 RPM D Version - 1” with Gas Engine Flange (F24)

RKV3.5G30AD-F24	3.5	13.2	3000	205	7.5	18	6.2	9	21	$475.00
RKV3.5G35D-F24	3.5	13.2	3500	240	8.4	18	6.2	9	21	525.00
RKV3.5G40HD-F24	3.5	13.2	4000	275	10.0	18	6.2	9	21	550.00
RKV4G30AD-F24	4.0	15.1	3000	205	7.5	18	7.0	8	21	475.00
RKV4G32D-F24	4.0	15.1	3200	220	7.5	18	7.0	8	21	525.00
RKV4G35HD-F24	4.0	15.1	3500	240	7.5	18	7.0	8	21	550.00
RKV4G40HD-F24	4.0	15.1	4000	275	11.0	18	7.0	8	21	550.00
RKV4.5G22D-F24	4.5	17.0	2200	275	12.0	18	8.0	7	21	525.00
RKV4.5G40HD-F24	4.5	17.0	4000	275	12.0	18	8.0	7	21	550.00
NEW RKV5G40HD-F24	5.0	18.3	4000	275	13.7	18	8.6	11	21	550.00
RKV5.5G40HD-F24	5.5	20.8	4000	275	15.0	18	9.8	6	21	550.00

Oil Capacity = 15 oz *Maximum Fluid Temperature* = 140° F *Inlet Thread* = 1/2”F *Discharge Thread* = 3/8”F

*Available upon special request (non-stock).

FEATURING

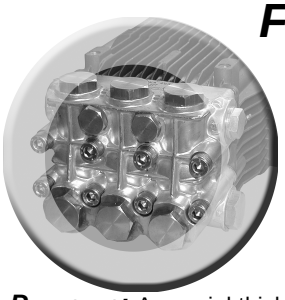

MANIFOLD: High strength forged brass or nickel plated for long term use.
BOLTS: Eight 8mm grade 8.8.

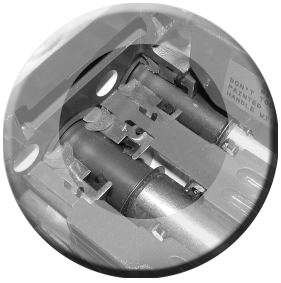

PLUNGERS: A special thick solid ceramic for long life, strong durability and more resilience.

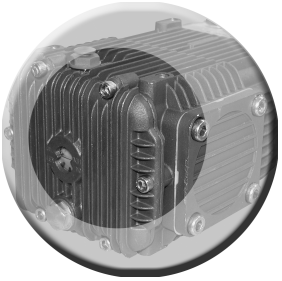

CRANKCASE: Precision die-cast, large cooling fins and anodized for maximum heat dissipation. Sight glass, fill and side and bottom drain plugs.

BEARINGS: Oversized premium tapered roller bearing for maximum life and load disbursement.

BEARING SUPPORT: Precision die-cast and machined to assure concentricity and alignment.

VALVES, SEATS, and ***SPRINGS:*** Stainless steel with specially designed Ultra Form cages to provide long life and positive seating.

SEALS and ***V-PACKINGS:*** Continuously lubricating for extended life.

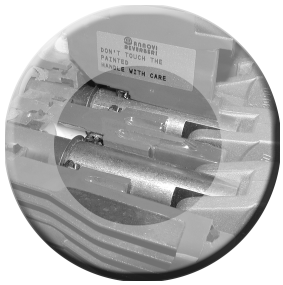

PLUNGER RODS: Stainless steel construction for strength, no plating to scrape off, back-up and o-ring plunger sealing system.

CONNECTING RODS: One piece bronze for higher pressure, oversized for maximum strength, load disbursement, and long life. Heavy pin area construction, for added load strength.

SRK / SRKA N VERSION

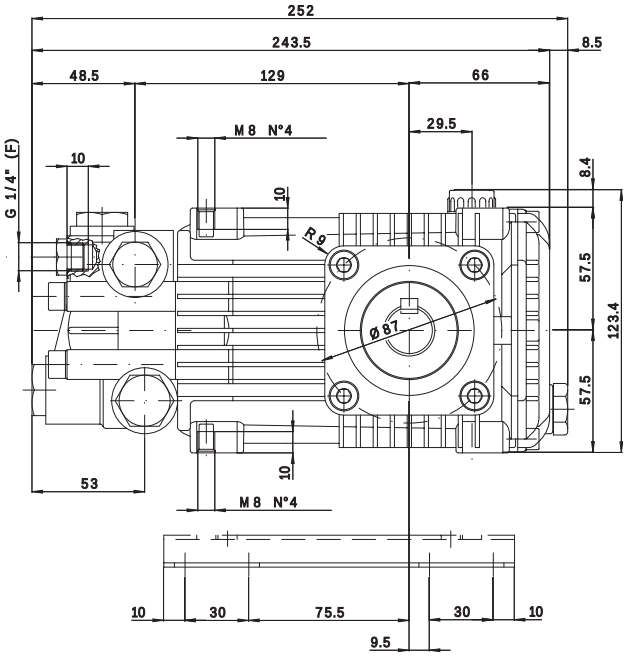

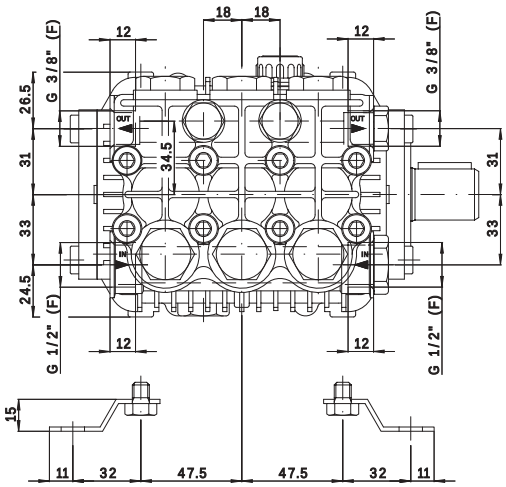

* Measurements are in Metric

SRK / SRKA - Triplex Plunger Pumps

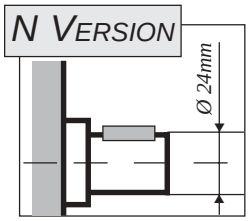

SRK 1450 RPM N VERSION - 24MM SOLID SHAFT

MODEL	MAX. GPM	MAX. LMP	MAX. PSI	MAX. BAR	POWER EBHP	BORE DIA. MM	STROKE MM	CRANKSHAFT ID STAMP	WEIGHT LBS.	LIST PRICE
SRK12.30HN*	3.17	13.0	4350	300	10.0	16.0	14.6	1	20	$575.00

OIL CAPACITY = 15 oz *MAXIMUM FLUID TEMPERATURE* = 140° F *INLET THREAD* = 1/2"F *DISCHARGE THREAD* = 3/8"F

SRKA 1750 RPM N VERSION - 24MM SOLID SHAFT

SRKA3.75G45N*	3.75	14.2	4500	310	12.0	16.0	14.6	1	20	$575.00

OIL CAPACITY = 15 oz *MAXIMUM FLUID TEMPERATURE* = 140° F *INLET THREAD* = 1/2"F *DISCHARGE THREAD* = 3/8"F

RAIL KITS

AR1837	5/8"	$12.60
AR2633	1-3/4"	16.80
AR2633H	2-5/8"	22.05

*Available upon special request (non-stock).

FEATURING

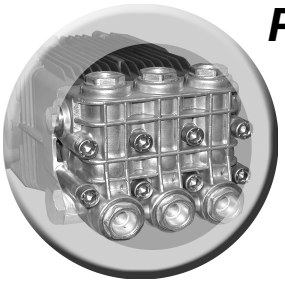

MANIFOLD: High strength forged brass for long term use.

BOLTS: Eight 10mm grade 8.8.

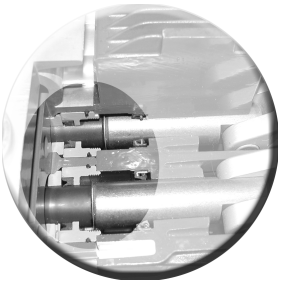

PLUNGERS: A special thick solid ceramic for long life, strong durability and more resilience.

CRANKCASE: Precision die-cast, large cooling fins and anodized for maximum heat dissipation. Bayonet style sight glass located in the rear and side cover, fill and side and bottom drain plugs.

BEARINGS: Oversized premium tapered roller bearing for maximum life and load disbursement.

BEARING SUPPORT: Precision die-cast and machined to assure concentricity, alignment and strength.

VALVES, SEATS, and ***SPRINGS:*** Stainless steel with specially designed Ultra Form cages to provide long life and positive seating.

PATENTED VALVE CAP DESIGN.

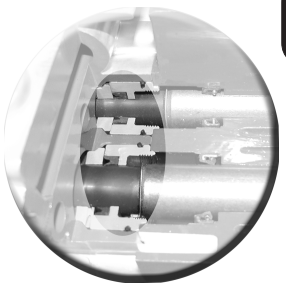

SEALS AND U-PACKING: Continuously lubricating for extended life. Triple lip oil seal for assured crankcase seal.

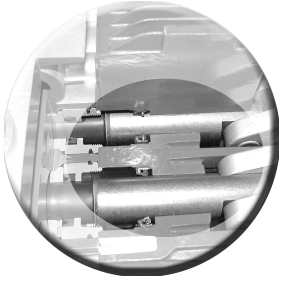

PLUNGER RODS: High strength stainless steel, for heavy duty use.

CONNECTING RODS: Two-piece special alloy aluminum based material, oversized for maximum strength, load disbursement, and long life. Heavy pin area construction, for added load strength.

XW & XWA N VERSION

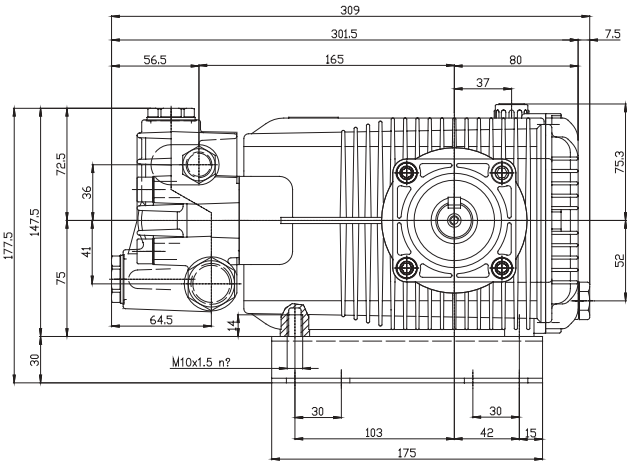

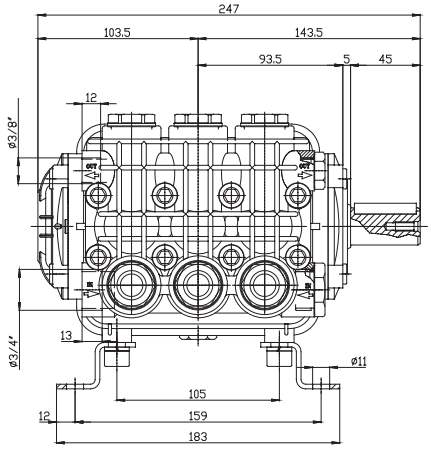

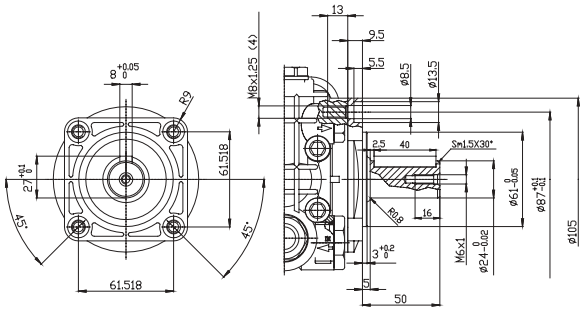

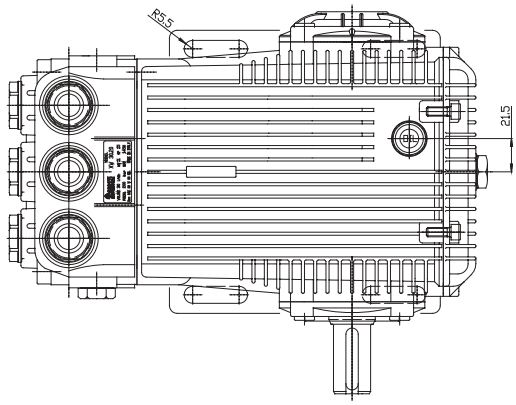

* Measurements are in Metric

XW / XWA - Triplex Plunger Pumps

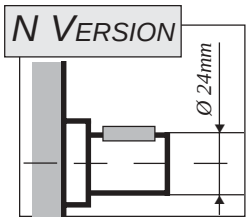

XW 1450 RPM N VERSION - 24MM SOLID SHAFT

MODEL	MAX. GPM	MAX. LMP	MAX. PSI	MAX. BAR	POWER EBHP	BORE DIA. MM	STROKE MM	CRANKSHAFT NUMBER	WEIGHT LBS.	LIST PRICE
XW15.15	3.96	15.0	2200	150	5.5	20	12.2	5	34	$675.00
XW15.20	3.96	15.0	2900	200	7.5	20	12.2	5	34	675.00
XW15.30	3.96	15.0	4350	300	12.0	20	12.2	5	34	675.00
XW21.20	5.55	21.0	2900	200	10.0	20	16.6	3	34	675.00
XW21.25	5.55	21.0	3600	250	12.5	20	16.6	3	34	675.00
XW21.28	5.55	21.0	4060	280	15.0	20	16.6	3	34	675.00
XW26.12	6.87	26.0	1740	120	7.5	20	19.8	1	34	775.00
XW26.15	6.87	26.0	2200	150	10.0	20	19.8	1	34	775.00
XW26.20	6.87	26.0	2900	200	12.5	20	19.8	1	34	775.00
XW26.23	6.87	26.0	3400	230	15.0	20	19.8	1	34	775.00
XW30.10	7.92	30.0	1450	100	7.5	22	19.8	1	34	825.00
XW30.15	7.92	30.0	2200	150	10.0	22	19.8	1	34	825.00
XW30.20	7.92	30.0	2900	200	15.0	22	19.8	1	34	825.00
XW30.25	7.92	30.0	3600	250	19.0	22	19.8	1	34	825.00

OIL CAPACITY = 32 oz *MAXIMUM FLUID TEMPERATURE* = 140° F *INLET THREAD* = 3/4"F *DISCHARGE THREAD* = 3/8"F

XWA 1750 RPM N VERSION - 24MM SOLID SHAFT

XWA4G20N	4.0	15.1	2000	140	5.5	20	10.0	6	34	$675.00
XWA4G30N	4.0	15.1	3000	205	7.5	20	10.0	6	34	675.00
XWA4G40N	4.0	15.1	4000	275	11.0	20	13.8	6	34	675.00
XWA5.5G22N	5.5	20.5	2200	150	7.5	20	13.8	4	34	675.00
XWA5.5G30N	5.5	20.5	3000	200	10.0	20	13.8	4	34	675.00
XWA5.5G40N	5.5	20.5	4000	275	14.0	20	13.8	4	34	675.00
XWA7G22N	7.0	25.5	2200	150	10.0	20	17.2	2	34	775.00
XWA7G32N	7.0	25.5	3200	220	14.0	20	17.2	2	34	775.00
XWA7G35N	7.0	25.5	3500	240	15.0	20	17.2	2	34	775.00
XWA7G40N	7.0	25.5	4000	275	17.0	20	17.2	2	34	775.00
XWA8G19N	8.0	30.2	1900	130	10.0	20	19.8	1	34	775.00
XWA8G29N	8.0	30.2	2900	200	15.0	20	19.8	1	34	775.00
XWA8G35N	8.0	30.2	3500	240	18.0	20	19.8	1	34	775.00
XWA9G16N	9.0	34.0	1600	110	10.0	22	19.8	1	34	825.00
XWA9G24N	9.0	34.0	2400	170	15.0	22	19.8	1	34	825.00

OIL CAPACITY = 32 oz *MAXIMUM FLUID TEMPERATURE* = 140° F *INLET THREAD* = 3/4"F *DISCHARGE THREAD* = 3/8"F

RAIL KITS

AR2748	1-1/4"	$12.60

*Available upon special request (non-stock).

FEATURING

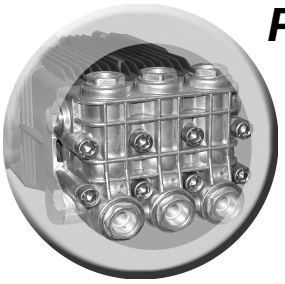

MANIFOLD: High strength forged brass for long term use.

BOLTS: Eight 10mm grade 8.8.

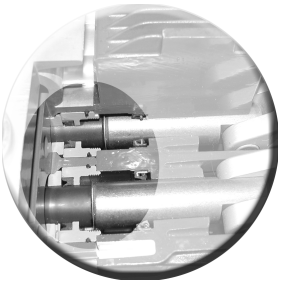

PLUNGERS: A special thick solid ceramic for long life, strong durability and more resilience.

CRANKCASE: Precision die-cast, large cooling fins and anodized for maximum heat dissipation. Bayonet style sight glass located in the rear and side cover, fill and side and bottom drain plugs.

BEARINGS: Oversized premium tapered roller bearing for maximum life and load disbursement.

BEARING SUPPORT: Precision die-cast and machined to assure concentricity, alignment and strength.

VALVES, SEATS, and ***SPRINGS:*** Stainless steel with specially designed Ultra Form cages to provide long life and positive seating.

PATENTED VALVE CAP DESIGN.

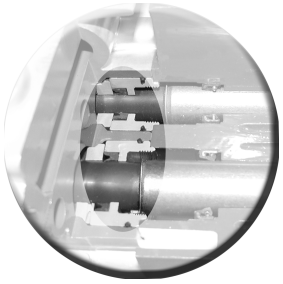

SEALS AND U-PACKING: Continuously lubricating for extended life. Triple lip oil seal for assured crankcase seal.

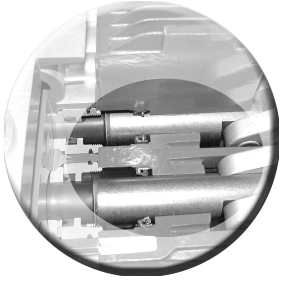

PLUNGER RODS: High strength stainless steel, for heavy duty use.

CONNECTING RODS: Two-piece special alloy aluminum based material, oversized for maximum strength, load disbursement, and long life. Heavy pin area construction, for added load strength.

XWT / XWF / XWL / XWLA N VERSION

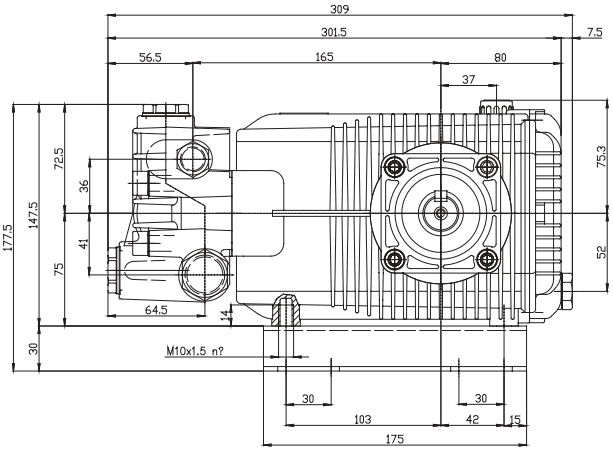

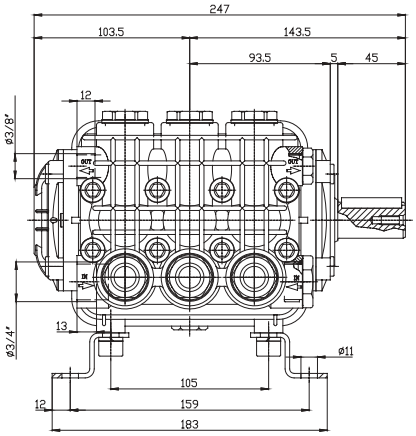

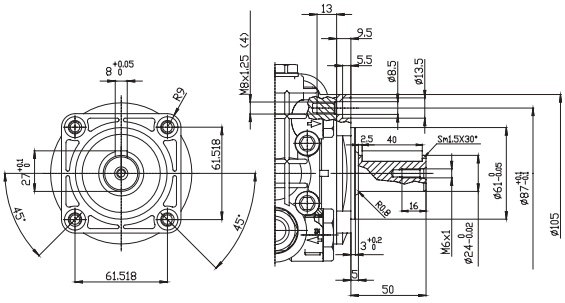

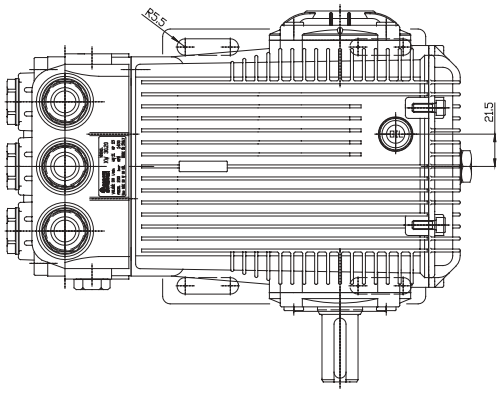

* Measurements are in Metric

XWT / XWF / XWL / XWLA - Triplex Plunger Pumps

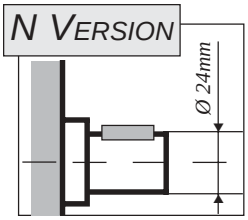

XWT 500 RPM N VERSION - 24MM SOLID SHAFT

MODEL	MAX. GPM	MAX. LMP	MAX. PSI	MAX. BAR	POWER EBHP	BORE DIA. MM	STROKE MM	CRANKSHAFT NUMBER	WEIGHT LBS.	LIST PRICE
XWT21.20N	5.55	21	2900	200	11.0	28	19.8	1	34	$845.00

OIL CAPACITY = 32 oz *MAXIMUM FLUID TEMPERATURE* = 140° F *INLET THREAD* = 3/4"F *DISCHARGE THREAD* = 3/8"F

XWF 1000 RPM N VERSION - 24MM SOLID SHAFT

XWF26.06N	6.87	26	900	60	4.0	28	15.0	8	34	$890.00
XWF26.09N	6.87	26	1300	90	5.5	28	15.0	8	34	890.00
XWF26.12N	6.87	26	1740	120	7.5	28	15.0	8	34	890.00
XWF26.15N	6.87	26	2200	150	10.0	28	15.0	8	34	890.00
XWF26.20N	6.87	26	2900	200	13.0	28	15.0	8	34	890.00
XWF30.10N	7.92	30	1450	100	7.5	28	17.2	2	34	890.00
XWF30.20N	7.92	30	2900	200	15.0	28	17.2	2	34	890.00
XWF36.17N	9.51	36	2500	170	15.0	28	19.6	1	34	890.00

OIL CAPACITY = 32 oz *MAXIMUM FLUID TEMPERATURE* = 140° F *INLET THREAD* = 3/4"F *DISCHARGE THREAD* = 3/8"F

NEW

XWL 1450 RPM N VERSION - 24MM SOLID SHAFT

XWL42.05N	11.09	42	725	50	5.5	28	17.2	2	34	$890.00
XWL42.07N	11.09	42	1000	70	8.0	28	17.2	2	34	890.00
XWL42.10N	11.09	42	1450	100	11.0	28	17.2	2	34	890.00
XWL42.15N	11.09	42	2200	150	16.0	28	17.2	2	34	890.00

OIL CAPACITY = 32 oz *MAXIMUM FLUID TEMPERATURE* = 140° F *INLET THREAD* = 3/4"F *DISCHARGE THREAD* = 3/8"F

NEW

XWLA 1750 RPM N VERSION - 24MM SOLID SHAFT

XWLA13G15N	13.0	49.2	1450	100	13.0	28	17.2	2	34	$890.00

OIL CAPACITY = 32 oz *MAXIMUM FLUID TEMPERATURE* = 140° F *INLET THREAD* = 3/4"F *DISCHARGE THREAD* = 3/8"F

RAIL KITS

AR2748	1-1/4"	$12.60

*Available upon special request (non-stock).

FEATURING

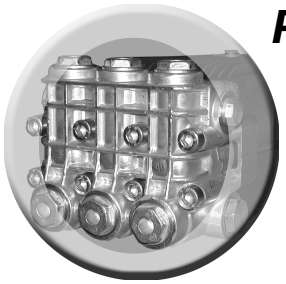

MANIFOLD: High strength forged brass for long term use.

BOLTS: Eight 10mm grade 8.8.

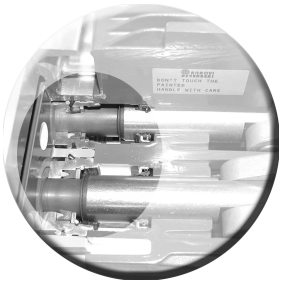

PLUNGERS: A special ultra thick solid ceramic for long life, strong durability and more resilience retaining bolts.

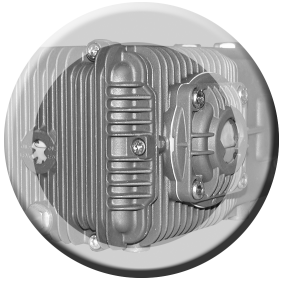

CRANKCASE: Precision die-cast, large cooling fins and anodized for maximum heat dissipation. Bayonet style sight glass located in the rear and side cover, fill and side and bottom drain plugs.

BEARINGS: Oversized premium SKF tapered roller bearing for maximum life and load disbursement.

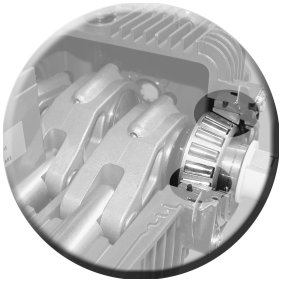

BEARING SUPPORT: Precision die-cast and machined to assure concentricity, alignment and strength.

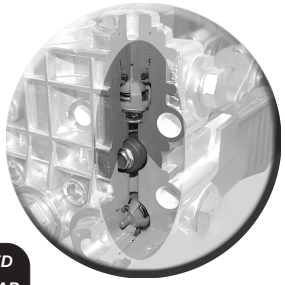

VALVES, SEATS, and ***SPRINGS:*** Stainless steel with specially designed Ultra Form cages to provide long life and positive seating. O-Ring and back-up ring provide longer life and better performance at high pressures.

PATENTED VALVE CAP DESIGN.

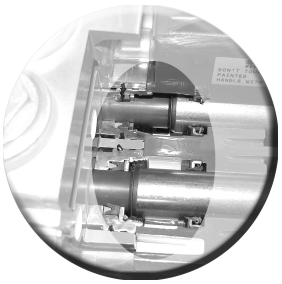

SEALS and ***U-PACKINGS:*** Continuously lubricating for extended life. Triple lip oil seal for assured crankcase seal.

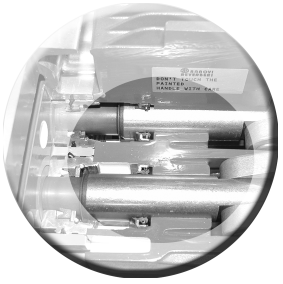

PLUNGER RODS: High strength stainless steel, for heavy duty use.

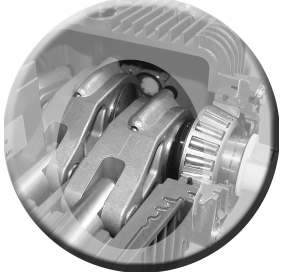

CONNECTING RODS: Two-piece special alloy aluminum based material, oversized for maximum strength, load disbursement, and long life. Heavy pin area construction, for added load strength.

SXW / SXWA N VERSION

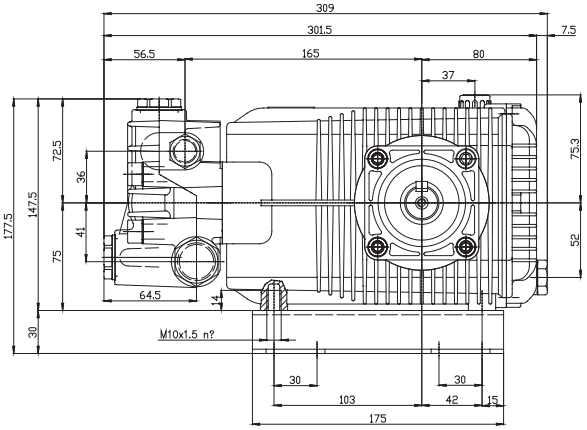

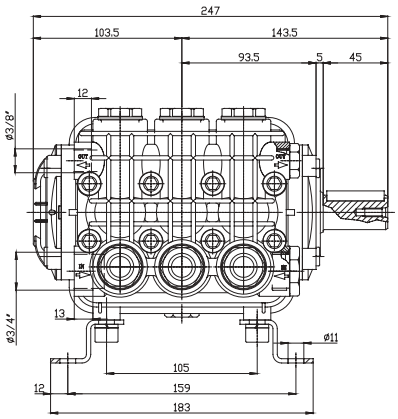

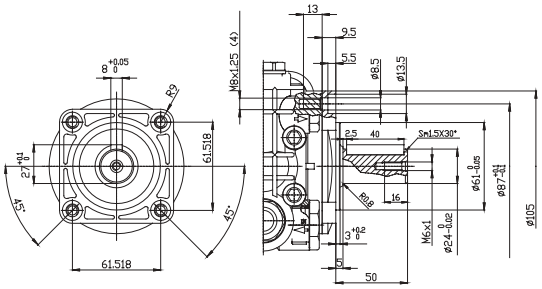

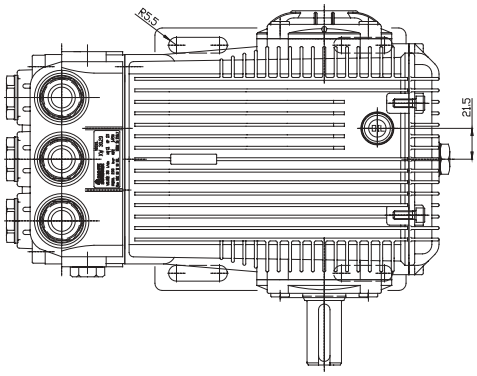

* Measurements are in Metric

SXW / SXWA - Triplex Plunger Pumps

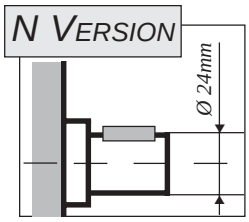

SXW 1450 RPM N VERSION - 24MM SOLID SHAFT

MODEL	MAX. GPM	MAX. LMP	MAX. PSI	MAX. BAR	POWER EBHP	BORE DIA. MM	STROKE MM	CRANKSHAFT NUMBER	WEIGHT LBS.	LIST PRICE
SXW15.35	3.96	15	5100	350	15	18	15.0	8	35	$895.00
SXW21.35	5.55	21	5100	350	20	18	21.0	7	35	895.00

OIL CAPACITY = 32 oz *MAXIMUM FLUID TEMPERATURE* = 140° F *INLET THREAD* = 1/2"F *DISCHARGE THREAD* = 3/8"F

SXWA 1750 RPM N VERSION - 24MM SOLID SHAFT

SXWA4G50	4.0	15.1	5000	345	13	18	12.2	5	35	$895.00
SXWA5.5G50	5.5	20.8	5000	345	17	18	17.2	2	35	895.00
SXWA7G50	7.0	26.5	5000	345	24	18	17.2	7	35	895.00

OIL CAPACITY = 32 oz *MAXIMUM FLUID TEMPERATURE* = 140° F *INLET THREAD* = 1/2"F *DISCHARGE THREAD* = 3/8"F

RAIL KITS

AR2748	1-1/4"	$12.60

*Available upon special request (non-stock).

FEATURING

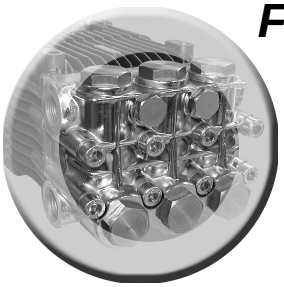

MANIFOLD: High strength forged brass for long term use.

BOLTS: Eight 10mm grade 8.8.

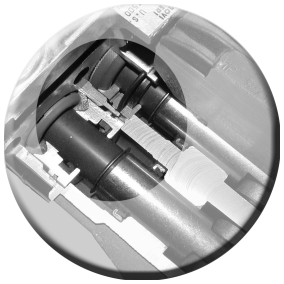

PLUNGERS: A special thick solid ceramic for long life, strong durability and more resilience.

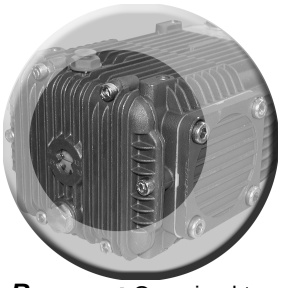

CRANKCASE: Precision die-cast, large cooling fins and anodized for maximum heat dissipation. Sight glass, fill and side and bottom drain plugs.

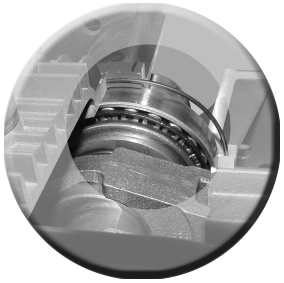

BEARINGS: Oversized tapered roller bearing for maximum life and load disbursement.

BEARING SUPPORT: Precision die-cast and machined to assure concentricity and alignment.

VALVES, SEATS, and ***SPRINGS:*** Stainless steel with specially designed Ultra Form cages to provide extra long life and positive seating.

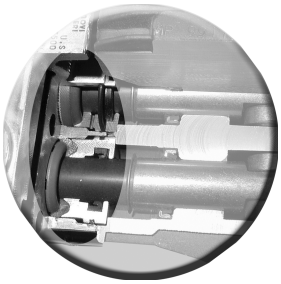

SEALS and ***V-PACKINGS:*** Continuously lubricating for extended life.

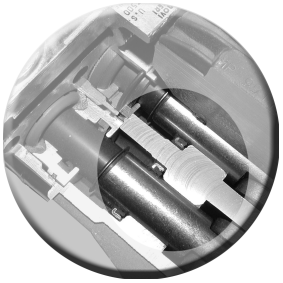

PLUNGER RODS: Stainless steel construction for strength, no plating to scrape off, back-up and o-ring plunger sealing system.

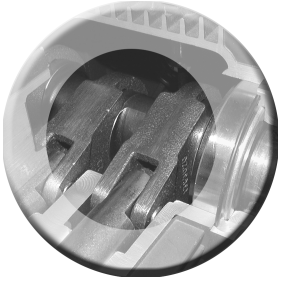

CONNECTING RODS: One piece special alloy aluminum or bronze for higher pressure, oversized for maximum strength, load disbursement, and long life. Heavy pin area construction, for added load strength.

GXMV V VERSION + F35

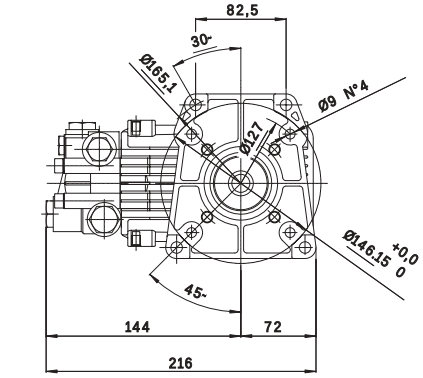

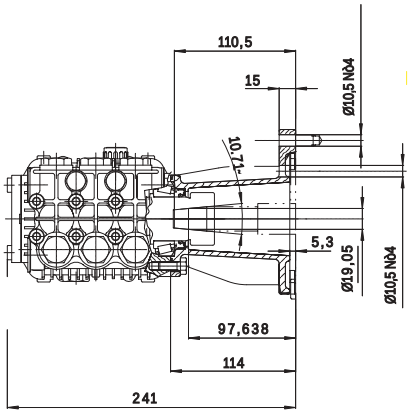

GRKV V VERSION + F35

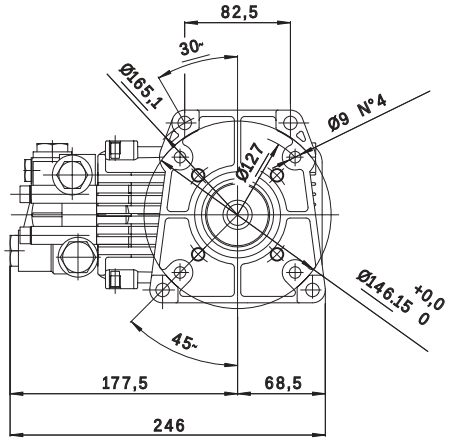

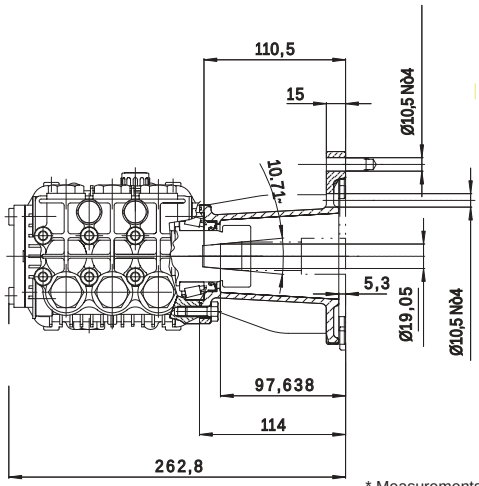

* Measurements are in Metric

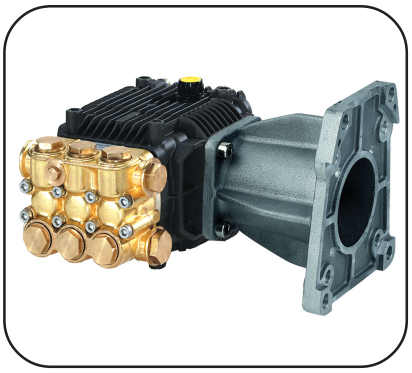

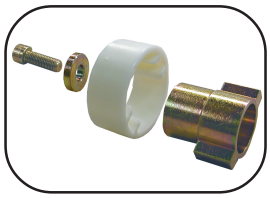

Mounting Hardware

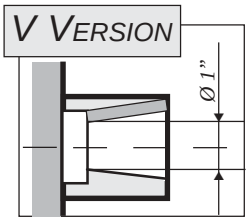

Patented Tapered Hollow Shaft for Coupling to tapered shaft engines

GXMV 3400 RPM V Version - 1” with Tapered Gas Engine Flange (F35)

Model	Max. GPM	Max. LMP	Max. PSI	Max. Bar	Power EBHP	Bore Dia. mm	Stroke mm	Crankshaft ID Stamp	Weight Lbs.	List Price
GXMV4G30-F35*	4.0	15.1	3000	205	8.5	15	9.4	7	16	$480.00

Oil Capacity = 14.6 oz ***Maximum Fluid Temperature*** = 140° F ***Inlet Thread*** = 1/2”F ***Discharge Thread*** = 3/8”F

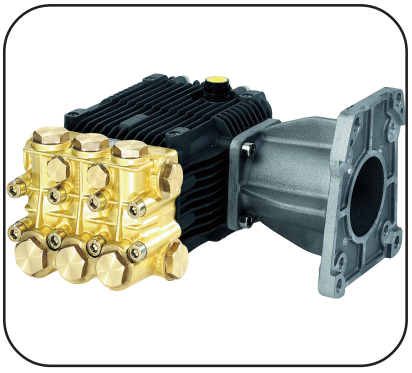

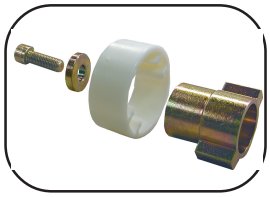

Mounting Hardware

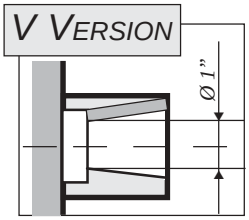

Patented Tapered Hollow Shaft for Coupling to tapered shaft engines

GRKV 3400 RPM V Version - 1” with Tapered Gas Engine Flange (F35)

Model	Max. GPM	Max. LMP	Max. PSI	Max. Bar	Power EBHP	Bore Dia. mm	Stroke mm	Crankshaft ID Stamp	Weight Lbs.	List Price
GRKV4G35HV-F35	4.0	15.1	3500	240	9.5	18	7.0	8	23	$650.00

Oil Capacity = 15 oz ***Maximum Fluid Temperature*** = 140° F ***Inlet Thread*** = 1/2”F ***Discharge Thread*** = 3/8”F

*Available upon special request (non-stock).

FEATURING

MANIFOLD: High strength forged brass for long term use.
BOLTS: Eight 8mm stainless steel.

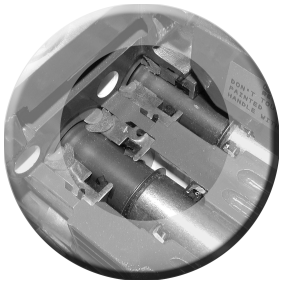

PLUNGERS: A special ultra thick solid ceramic for long life, strong durability and more resilience.

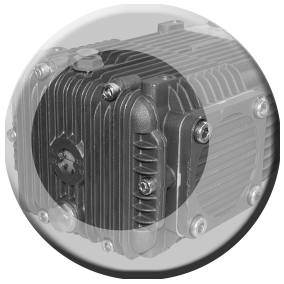

CRANKCASE: Precision die-cast, large cooling fins and anodized for maximum heat dissipation.

BEARINGS: Premium SKF tapered roller bearings that provide extra load support, smoother and lower crankcase running temperatures and overall extended pump life.

VALVES, SEATS, and ***SPRINGS:*** Stainless steel with specially designed cages to provide positive seating and extended valve life.

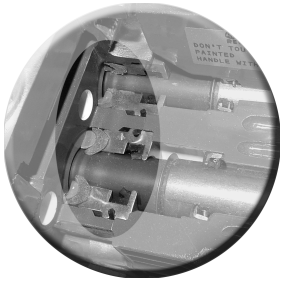

SEALS and ***V-PACKINGS:*** Continuously lubricating for extended life.

PLUNGER RODS: High strength stainless steel.

CONNECTING RODS: One piece special alloy aluminum based, oversized for maximum strength, load disbursement, and long life. Heavy pin area construction, for added load strength.

RCW N VERSION

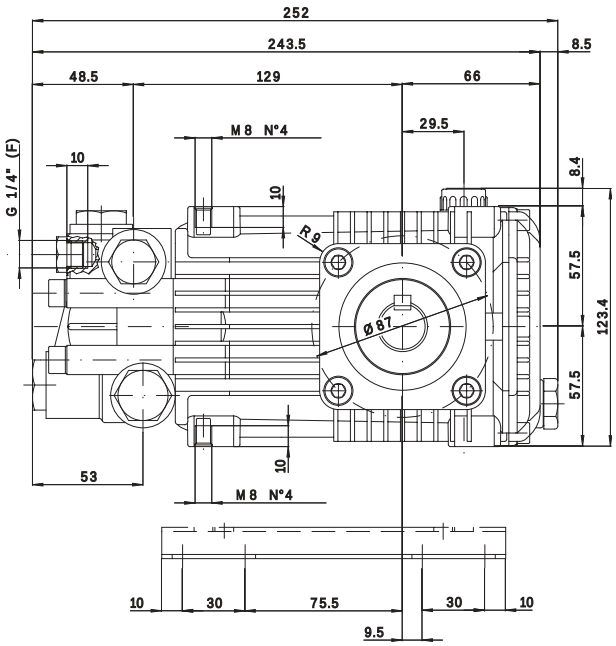

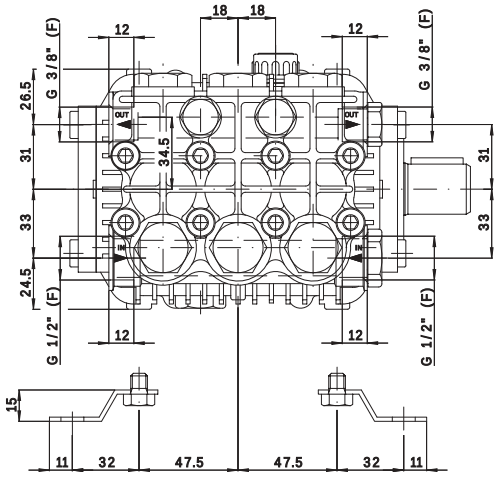

* Measurements are in Metric

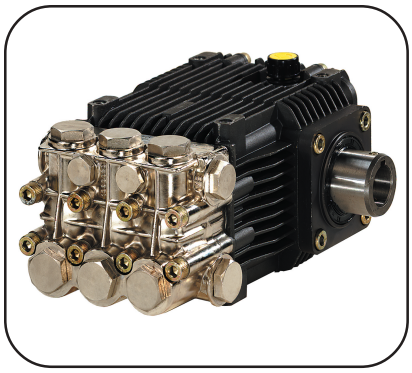

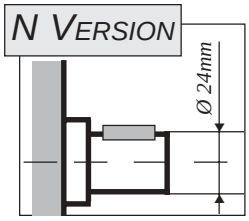

RCW 950 RPM N VERSION - 24MM SOLID SHAFT

MODEL	MAX. GPM	MAX. LMP	MAX. PSI	MAX. BAR	POWER EBHP	BORE DIA. MM	STROKE MM	CRANKSHAFT NUMBER	WEIGHT LBS.	LIST PRICE
RCW10.15N	2.65	10	2200	150	4.0	18	14.6	1	21	$620.00
RCW15.14N	3.96	15	2000	140	5.5	22	13.8	2	21	620.00

OIL CAPACITY = 15 OZ *MAXIMUM FLUID TEMPERATURE* = 140° F *INLET THREAD* = 1/2"F *DISCHARGE THREAD* = 3/8"F

RCW 1450 RPM N VERSION - 24MM SOLID SHAFT

RCW11.10N	2.9	11	1450	100	2.5	18	10.8	5	21	$620.00
RCW15.15N	3.96	15	2200	150	5.5	18	14.6	1	21	620.00

OIL CAPACITY = 15 OZ *MAXIMUM FLUID TEMPERATURE* = 140° F *INLET THREAD* = 1/2"F *DISCHARGE THREAD* = 3/8"F

RAIL KITS

AR1837	5/8"	$12.60
AR2633	1-3/4"	16.80
AR2633H	2-5/8"	22.05

FEATURING

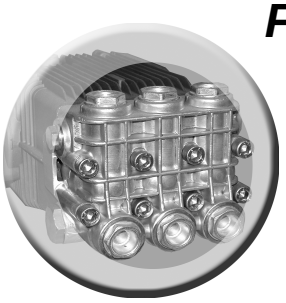

MANIFOLD: High strength forged brass for long term use.
BOLTS: Eight 10mm grade 8.8.

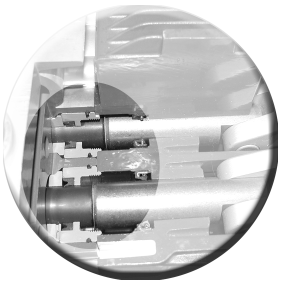

PLUNGERS: A special thick solid ceramic for long life, strong durability and more resilience.

CRANKCASE: Precision die-cast, large cooling fins and anodized for maximum heat dissipation. Bayonet style sight glass located in the rear and side cover, fill and side and bottom drain plugs.

BEARINGS: Premium SKF tapered roller bearings that provide extra load support, smoother and lower crankcase running temperatures and overall extended pump life.

VALVES, SEATS, and ***SPRINGS:*** Stainless steel with specially designed cages to provide positive seating and extended valve life.

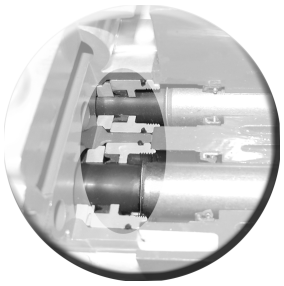

SEALS and ***V-PACKINGS:*** Continuously lubricating for extended life.

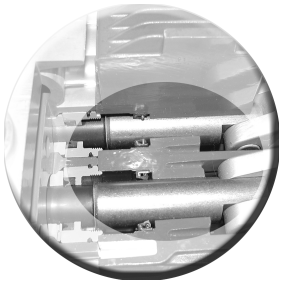

PLUNGER RODS: High strength stainless steel.

CONNECTING RODS: Two-piece special alloy aluminum based, oversized for maximum strength, load disbursement, and long life. Heavy pin area construction, for added load strength.

CWX N VERSION

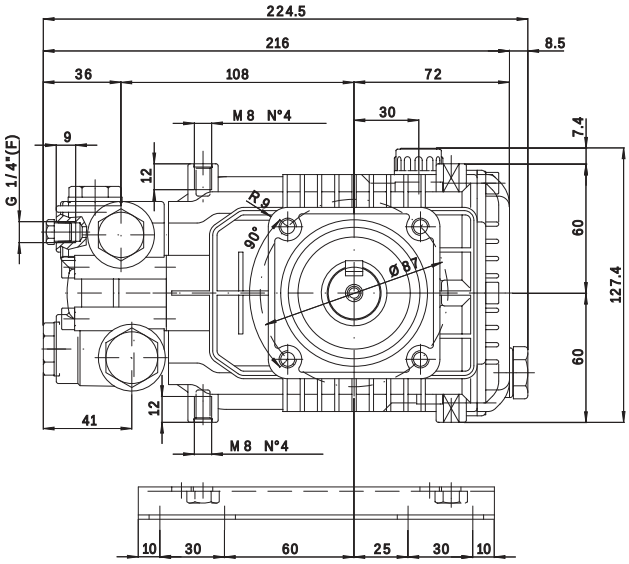

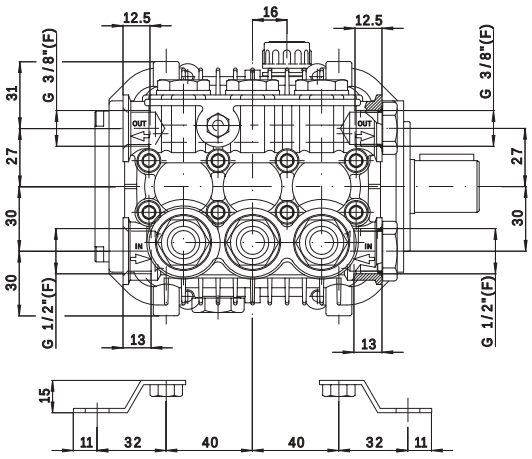

* Measurements are in Metric

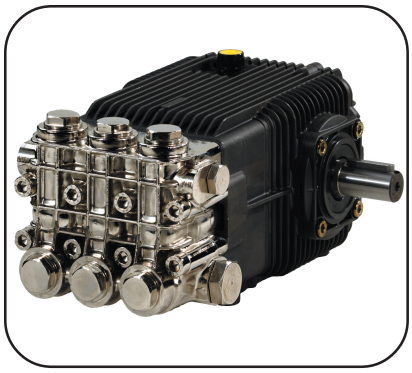

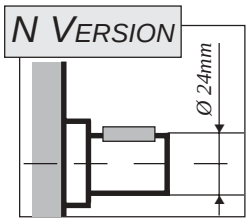

CWX 950 RPM N VERSION - 24MM SOLID SHAFT

MODEL	MAX. GPM	MAX. LMP	MAX. PSI	MAX. BAR	POWER EBHP	BORE DIA. MM	STROKE MM	CRANKSHAFT NUMBER	WEIGHT LBS.	LIST PRICE
CWX15.17N	3.96	15	2500	170	7.5	20	16.6	3	32	$850.00

OIL CAPACITY = 32 OZ *MAXIMUM FLUID TEMPERATURE* = 140° F *INLET THREAD* = 3/4"F *DISCHARGE THREAD* = 3/8"F

CWX 1200 RPM N VERSION - 24MM SOLID SHAFT

CWX18.10N	4.75	18	1450	100	5.0	20	16.6	3	32	$850.00

OIL CAPACITY = 32 OZ *MAXIMUM FLUID TEMPERATURE* = 140° F *INLET THREAD* = 3/4"F *DISCHARGE THREAD* = 3/8"F

CWX 1750 RPM N VERSION - 24MM SOLID SHAFT

CWX4G25N	4.0	15	2500	170	6.5	20	10.0	6	32	$850.00

OIL CAPACITY = 32 OZ *MAXIMUM FLUID TEMPERATURE* = 140° F *INLET THREAD* = 3/4"F *DISCHARGE THREAD* = 3/8"F

RAIL KITS

AR2748	1-1/4"	$12.60

FEATURING

MANIFOLD: High strength 316L Stainless Steel to insure long term use.
BOLTS: 304L stainless steel.

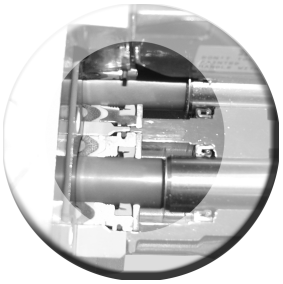

PLUNGERS: A special ultra thick solid ceramic for long life, strong durability and more resilience.

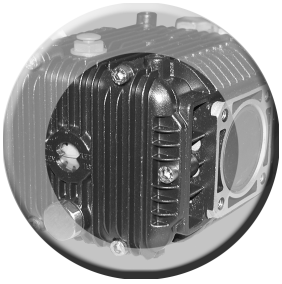

CRANKCASE: Precision die-cast, large cooling fins and special anticorrosion finish. Both side and rear cover sight glass.

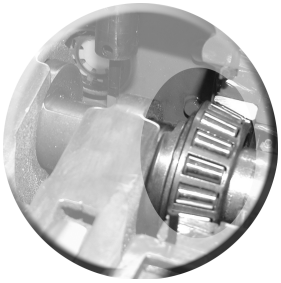

BEARINGS: Premium SKF tapered roller bearings that provide extra load support, smoother and lower crankcase running temperatures and overall extended pump life.

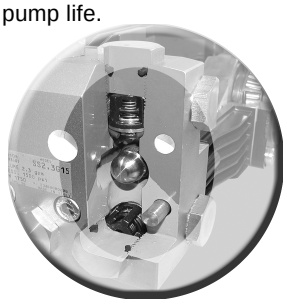

VALVES, SEATS, and ***SPRINGS:*** Stainless steel with specially designed cages to provide positive seating and extended valve life.

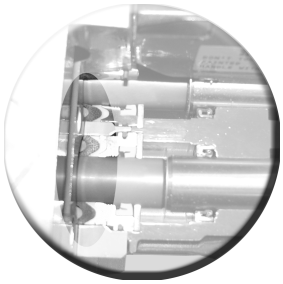

SEALS and ***V-PACKINGS:*** Viton are continuously lubricating for extended life. SPL plunger retainers.

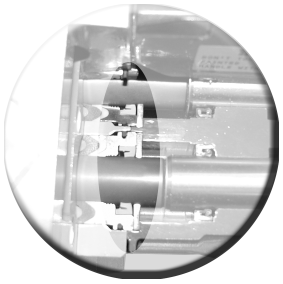

OIL SEALS: Triple lipped and spring loaded for greater durability and extended life.

PLUNGER RODS: High strength stainless steel.

CONNECTING RODS: One piece special alloy bronze for higher pressures, oversized for maximum strength, load disbursement, and long life. Heavy pin area construction.

XMA-SS E VERSION WITH F33 FLANGE

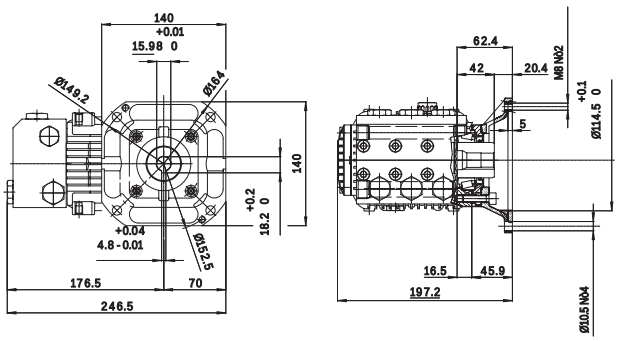

RKA-SS E VERSION WITH F33 FLANGE

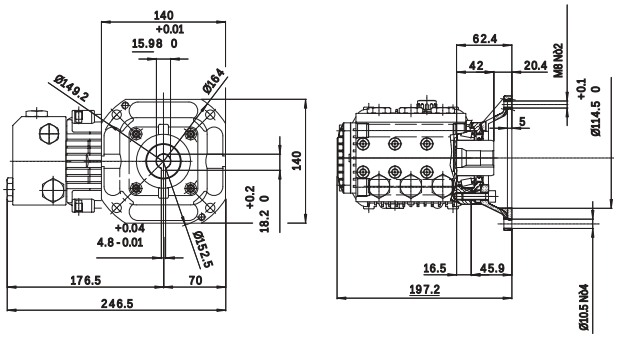

RKA-SS E VERSION WITH F17 FLANGE

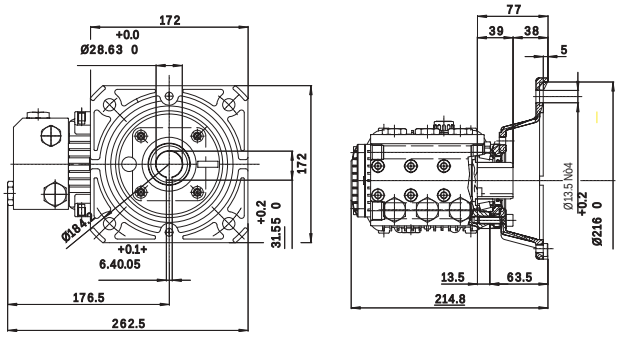

* Measurements are in Metric

XMA-SS / RKA-SS - Stainless Steel Pumps

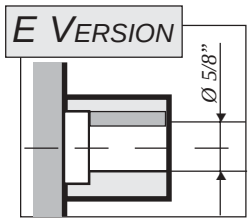

NEW

XMA-SS 1750 RPM E Version - 5/8” with NEMA 56 - C Flange (F33)

Model	Max. GPM	Max. LMP	Max. PSI	Max. Bar	Power EBHP	Bore Dia. mm	Stroke mm	Crankshaft Number	Weight Lbs.	List Price
XMASS0.5G15E-F33	0.5	1.9	1500	105	0.05	15	2.2	13	17	$1,000.00
XMASS2.5G15E-F33	2.5	9.5	1500	105	2.60	15	10.6	5	17	1,000.00
XMASS3G15E-F33	3.0	11.4	1500	105	3.10	15	13.2	6	17	1,000.00

Oil Capacity = 14.5 oz *Maximum Fluid Temperature* = 140° F *Inlet Thread* = 1/2”F *Discharge Thread* = 3/8”F

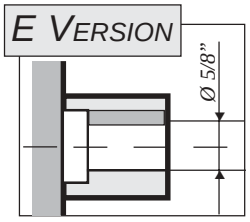

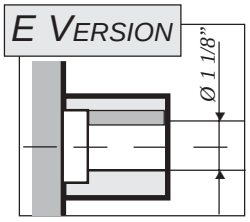

RKA-SS 1750 RPM E Version - 5/8” with NEMA 56 - C Flange (F33)

Model	Max. GPM	Max. LMP	Max. PSI	Max. Bar	Power EBHP	Bore Dia. mm	Stroke mm	Crankshaft Number	Weight Lbs.	List Price
RKA-SS2.3G15E-F33	2.3	8.7	1500	103	2.4	18	7.0	8	22	$1,450.00
RKA-SS3G15E-F33	3	11.4	1500	103	3.0	18	9.8	6	22	1,450.00
RKA-SS3.6G12E-F33	3.6	13.6	1500	103	3.0	18	11.2	10	22	1,450.00
RKA-SS4.2G15E-F33	4.2	15.9	1500	103	4.3	18	12.0	4	22	1,450.00

Oil Capacity = 15 oz *Maximum Fluid Temperature* = 140° F *Inlet Thread* = 1/2”F *Discharge Thread* = 3/8”F

RKA-SS 1750 RPM E Version - 1 1/8” with NEMA 182 - 184 Flange (F17)

RKA-SS2.3G15E-F17	2.3	8.7	1500	103	2.4	18	7.0	8	22	$1,525.00
RKA-SS3G15E-F17	3	11.4	1500	103	3.0	18	9.8	6	22	1,525.00
RKA-SS3.6G12E-F17	3.6	13.6	1500	103	3.0	18	11.2	10	22	1,525.00
RKA-SS4.2G15E-F17	4.2	15.9	1500	103	4.3	18	12.0	4	22	1,525.00

Oil Capacity = 15 oz *Maximum Fluid Temperature* = 140° F *Inlet Thread* = 1/2”F *Discharge Thread* = 3/8”F

*Available upon special request (non-stock).

FEATURING

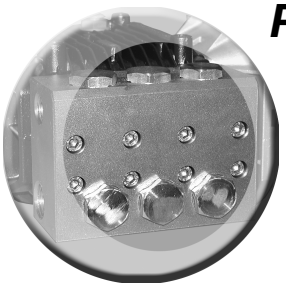

MANIFOLD: High strength 316L Stainless Steel to insure long term use.
BOLTS: 304L stainless steel.

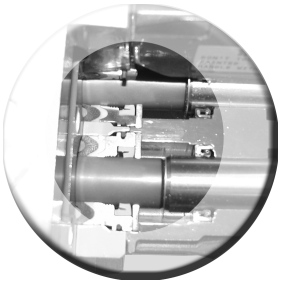

PLUNGERS: A special ultra thick solid ceramic for long life, strong durability and more resilience.

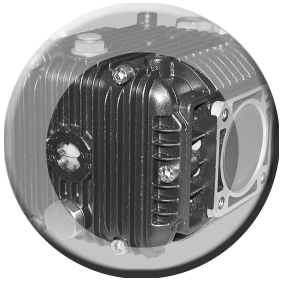

CRANKCASE: Precision die-cast, large cooling fins and special anticorrosion finish. Both side and reach cover sight glass.

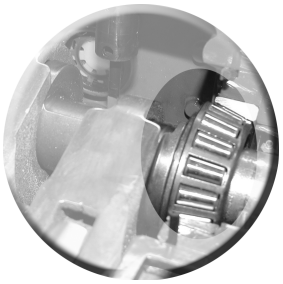

BEARINGS: Premium SKF tapered roller bearings that provide extra load support, smoother and lower crankcase running temperatures and overall extended pump life.

VALVES, SEATS, and ***SPRINGS:*** Stainless steel with specially designed cages to provide positive seating and extended valve life.

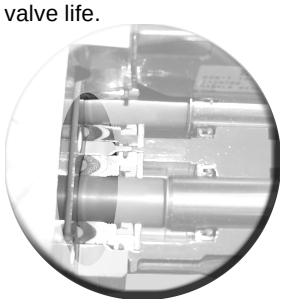

SEALS and ***V-PACKINGS:*** Viton are continuously lubricating for extended life. SPL plunger retainers.

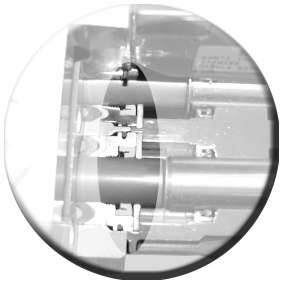

OIL SEALS: Triple lipped and spring loaded for greater durability and extended life.

PLUNGER RODS: High strength stainless steel.

CONNECTING RODS: One piece special alloy bronze for higher pressures, oversized for maximum strength, load disbursement, and long life. Heavy pin area construction.

RK-SS N VERSION

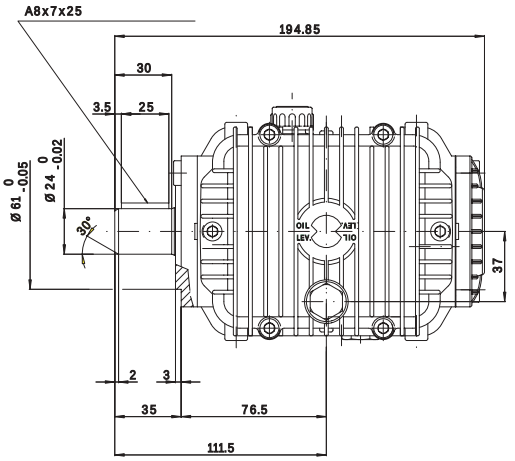

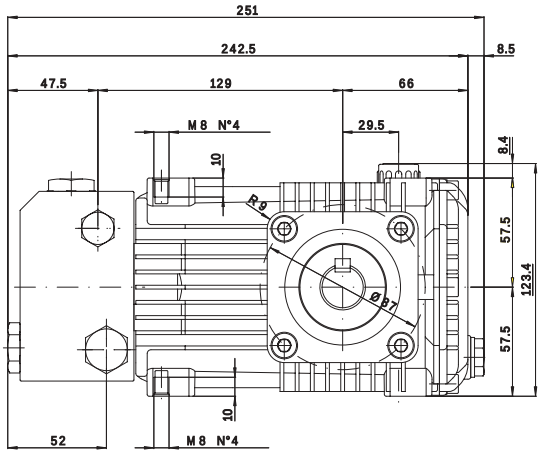

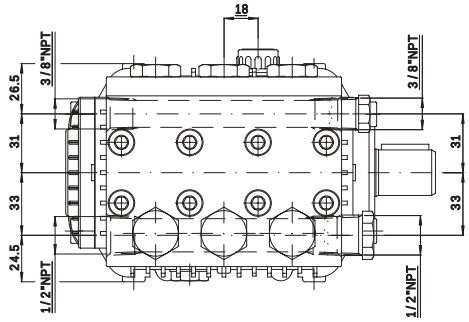

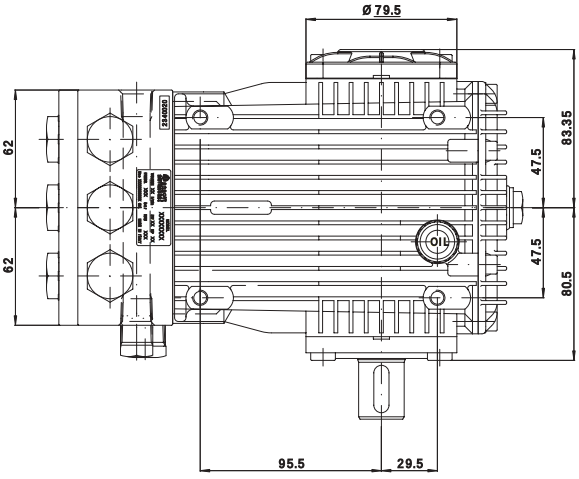

* Measurements are in Metric

RK-SS / RKA-SS - Stainless Steel Pumps

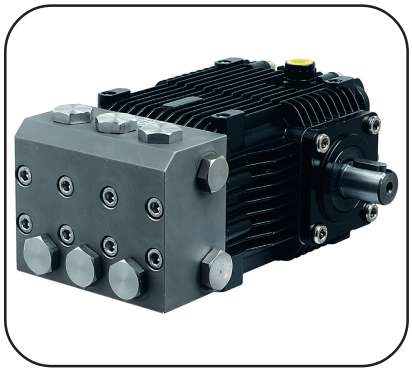

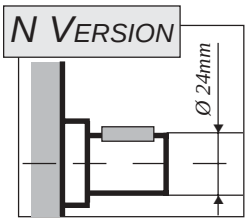

RK-SS 1450 RPM N Version - 24mm Solid Shaft

Model	Max. GPM	Max. LMP	Max. PSI	Max. Bar	Power EBHP	Bore Dia. mm	Stroke mm	Crankshaft Number	Weight Lbs.	List Price
RK-SS11.11N	2.9	11	1600	110	3.0	18	10.8	5	22	$1,400.00
RK-SS13.17N	3.43	13	2500	170	5.5	18	12.8	3	22	1,400.00
RK-SS15.15N	3.96	15	2200	150	5.5	18	14.6	1	22	1,400.00

Oil Capacity = 15 oz *Maximum Fluid Temperature* = 140° F *Inlet Thread* = 1/2"F *Discharge Thread* = 3/8"F

RKA-SS 1750 RPM N Version - 24mm Solid Shaft

RKA-SS2.3G15N*	2.3	8.7	1500	103	2.5	18	7.0	8	22	$1,400.00
RKA-SS3G15N*	3	11.4	1500	103	3.0	18	9.8	6	22	1,400.00
RKA-SS3.6G12N*	3.6	13.6	1500	83	3.0	18	11.2	10	22	1,400.00
RKA-SS4.2G15N	4.2	15.9	1500	103	4.3	18	12.0	4	22	1,400.00

Oil Capacity = 15 oz *Maximum Fluid Temperature* = 140° F *Inlet Thread* = 1/2"F *Discharge Thread* = 3/8"F

Rail Kits

AR1837	5/8"	$12.60
AR2633	1-3/4"	16.80
AR2633H	2-5/8"	22.05

*Available upon special request (non-stock).

Crankcase Oil NEW

	Model	Description	List Price
	AR64545	Crankcase Oil for AR Pump Models XJV, SJV, XJW & SJW 4.5 oz	$7.25
	AR64545C	Crankcase Oil for AR Pump Models XJV, SJV, SJW & SJW 4.5 oz Case - 24 per package	160.00
	AR64516	Triplex Plunger Pump Crankcase Oil 16 oz	6.00
	AR64516C	Triplex Plunger Pump Crankcase Oil 16 oz Case - 12 per package AR Pump Oil is specially formulated Crankcase Oil for High Pressure Pumps. Contains anti-wear, rust inhibitor and deoxidizer additives.	66.00

Tools NEW

	AR1560590	Nut holder for adjusting Gymatic Unloader	$16.40
	AR1540740	Nut holder for adjusting Minimatic Unloader	27.40
	AR980069	Packing Extractor for XW Series pumps	89.00

Rail Kits NEW

	Model	Height Size	Pump Series	List Price
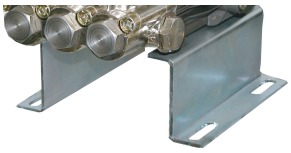	AR2729	5/8”	SXM, XM, XM-SS	8.40
	AR1837	1-1/4”	RCW, RK, RK-SS, SRK	12.60
	AR2748	1-1/4”	CWX, SXW, XW	12.60
	AR1836	1/2”	XT	12.00
	AR1836H	1-5/8”	XT	16.80
	AR2633	5/8”	RCW, RK, RK-SS, SRK	16.80
	AR2633H	2-5/8”	RCW, RK, RK-SS, SRK, SXM, XM, XM-SS	22.05
	U-Bracket	1-1/4”	Universal Pump Bracket	36.00

Gear Boxes - RK, XM, XR & XW Series

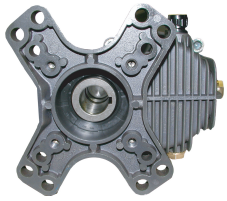

Model	Description	List Price
AR1689	***RK / XM / XR Series*** 1:2.24 Reduction box for 1" shaft, SAE J609a flange (1450 RPM Pump)	$235.00
AR1690	***RK / XM / XR Series*** 1:2 Reduction box for 1" shaft, SAE J609a flange (1750 RPM Pump)	235.00
AR1697	***XW Series*** 1:2 Reduction box for 1" shaft, SAE J609a flange (1750 RPM Pump)	270.00
AR1698	***XW Series*** 1:2.24 Reduction box for 1" shaft, SAE J609a flange (1450 RPM Pump)	270.00
AR1600	***RK / XR / XW / SXW Series*** 1:2.24 Reduction box for 1" shaft, SAE J609a flange (1450 RPM Pump)	290.00
AR1601	***RK / XR / XW / SXW Series*** 1:2.24 Reduction box for 1 1/8" shaft, SAE J609a flange (1450 RPM Pump)	325.00
AR1696	***RK Series*** 2,65:1 Overgear for tractor P.T.O.	590.00

Flanges/Couplings - RK, XM, XR & XW Series

AR1588	F14 - NEMA 182-184 bell housing and flexible coupling set (24mm x 1 1/8")	$160.00
AR1589	F15 - NEMA 213-215 bell housing and flexible coupling set (24mm x 1 3/8")	160.00
AR1380490	Bell housing for F14 (AR1588) and F15 (AR1589)	125.00
AR1380301	Coupling kit, pump side for AR1588 & AR1589, (24mm) includes couplings, bushings, and set screws.	32.00
AR1380331	Coupling kit, motor side for AR1588, (1 1/8") includes couplings, bushings, and set screws.	32.00
AR1380351	Coupling kit, motor side for AR1589, (1 3/8") includes couplings, bushings, and set screws.	32.00

Electric Clutch - XM, RK & XW Series

CL-517162	12 Volt Double groove clutch 3/4" x 7"	$350.00
CL-521491	12 Volt Single groove clutch 24mm x 7"	350.00
CL-522850	12 Volt Double groove clutch 24mm x 7"	380.00
AR-CLMP	Clutch mounting plate, XM, RK, XW Series	30.00

*24 Volt Clutch available upon request, call for price.

Regulating Valves/Control Sets

MINI-MATIC 4/B

XT & XM Series Unloader Valve & By-Pass

Model	Max PSI	Max GPM	Inlet	Outlet	Bypass	Fixed/ Adjustable	Size	ID Stamp	List Price
AR20821	2,600	2-5	1/2” F	3/8” M	Aluminum	-	-	-	$72.00
AR20888	2,600	2-3	1/2” F	3/8” M	Aluminum	Fixed	1.8	1	76.00
AR20890	2,600	2-3	1/2” F	3/8” M	Aluminum	Adjustable	2.0	2	82.00
AR21036	2,600	2-5	1/2” F	3/8” M	Brass	-	-	-	76.00
AR21037	2,600	2-3	1/2” F	3/8” M	Brass	Fixed	2.0	2	80.00
AR21038	2,600	3-4	1/2” F	3/8” M	Brass	Fixed	2.2	3	80.00
AR21039	2,600	2-3	1/2” F	3/8” M	Brass	Adjustable	2.0	2	86.00
AR21040	2,600	3-4	1/2” F	3/8” M	Brass	Adjustable	2.2	3	86.00

GYMATIC 3/B

XM & RK Series Unloader Valve & By-Pass

Model	Max PSI	Max GPM	Inlet	Outlet	Bypass	Fixed/ Adjustable	Size	ID Stamp	List Price
AR20242	3,650	3-5.5	1/2” F	3/8” M	Brass	-	-	-	88.00
AR20242G	3,650	3-5.5	GHT & Filter	3/8” M	Brass	-	-	-	93.00
AR20081	3,650	3-5.5	1/2” M	3/8” M	Brass	Fixed	1.8	1	94.00
AR20082	3,650	3-5.5	1/2” M	3/8” M	Brass	Fixed	2.0	2	94.00
AR20399	3,650	3-5.5	1/2” M	3/8” M	Brass	Adjustable	1.8	1	98.00
AR20400	3,650	3-5.5	1/2” M	3/8” M	Brass	Adjustable	2.0	2	98.00

GYMATIC VR35 3/B

XM & RK Series Unloader Valve & By-Pass

Model	Max PSI	Max GPM	Inlet	Outlet	Bypass	Fixed/ Adjustable	Size	ID Stamp	List Price
AR20992	4,000	5	1/2” F	3/8” M	3/8” F	-	-	-	105.00

GYMATIC 3B XW

XW Series Unloader Valve & By-Pass

Model	Max PSI	Max GPM	Inlet	Outlet	Bypass	Fixed/ Adjustable	Size	ID Stamp	List Price
AR20802	3,650	9	3/4” F	3/8” M	Brass	-	-	-	93.00
AR20758	3,650	9	1/2” F	3/8” M	Brass	-	-	-	93.00

Unloader Valves

	Model	Max PSI	Max GPM	Max Temp	Inlet	Outlet	Bypass	Spring Color	Knob	List Price
					VRL - Unloader					
	AL601Y	1,450	8	194° F	3/8" F	3/8" F	3/8" F	Yellow	No	$47.50
	AL601	2,900	8	194° F	3/8" F	3/8" F	3/8" F	Red	No	47.50
	AL602	3,650	8	194° F	3/8" F	3/8" F	3/8" F	Blue	No	47.50
	AL603Y	1,450	8	194° F	3/8" F	3/8" F	3/8" F	Yellow	Yes	49.00
	AL603	2,900	8	194° F	3/8" F	3/8" F	3/8" F	Red	Yes	49.00
	AL604	3,650	8	194° F	3/8" F	3/8" F	3/8" F	Blue	Yes	49.00
					VRT - Unloader					
	AL605Y	1,500	8	190° F	2x3/8"F	3/8" F	2x3/8" F	Yellow	Yes	52.00
	AL605	2,900	8	190° F	2x3/8"F	3/8" F	2x3/8" F	Red	Yes	52.00
	AL606	3,650	8	190° F	2x3/8"F	3/8" F	2x3/8" F	Blue	Yes	52.00
	AL607	4,200	8	190° F	2x3/8"F	3/8" F	2x3/8" F	Black	Yes	56.00
					VHP - Unloader					
	AL608	4,000	11	190° F	2x3/8"F	3/8" F	2x3/8" F	Green	Yes	72.00
	AL609	5,000	11	190° F	2x3/8"F	3/8" F	2x3/8" F	Purple	Yes	72.00
					VRS - Unloader					
	AL621	3,000	8	190° F	3/8" F	3/8"	1/4" F	Red	No	47.00
	AL623	3,000	8	190° F	3/8"F	3/8"	3/8" F	Red	Yes	49.00
					VR2 - Unloader					
	AL643	2,500	6	190° F	3/8" M	3/8" M	3/8" M	-	Yes	43.00
					Zeromatic/83 Unloader ***Multi Gun Unloader***					
	AR2882	3,600	3 - 10	-	1/2" M	1/2" M	1/2" F	-	-	120.00
					VR35 - Unloader					
	AR20831	5,100	9	-	3/8" M	3/8" M	3/8" F	-	Yes	140.00

Unloader Valves With Pressure Switch

Model	Max PSI	Max GPM	Max Temp	Inlet	Outlet	Bypass	Spring Color	Knob	List Price
VRT - Unloader with Pressure Switch									
AL686	3,650	7.8	190° F	3/8" F	3/8" F	2x3/8" F	Blue	Yes	$78.00
AL687	4,200	7.8	190° F	3/8" F	3/8" F	2x3/8" F	Black	Yes	82.00

Pressure switch activation pressure AL686 = 725 PSI AL687 = 1160 PSI

VRL - Unloader with Pressure Switch									
AL684	2,900	8	194° F	3/8" F	3/8" F	3/8" F	Red	Yes	70.00
AL685	3,650	8	194° F	3/8" F	3/8" F	3/8" F	Blue	Yes	70.00

Pressure switch activation pressure AL684 = 725 PSI AL685 = 1160 PSI

Stainless Steel Unloader Valves

VX S.S. 303 - Unloader									
AL635	2,900	7.8	190° F	3/8" F	3/8" F	1/4" F	Red	No	$360.00
AL636	3,650	7.8	190° F	3/8" F	3/8" F	1/4" F	Blue	Yes	360.00

VX S.S. 316 - Unloader									
AL637	2,900	7.8	190° F	3/8" F	3/8" F	1/4" F	Red	No	550.00
AL638	3,650	7.8	190° F	3/8" F	3/8" F	1/4" F	Blue	Yes	550.00

VR S.S. 316 - Unloader									
AR21350	2,900	12.0	195° F	3/8" F	3/8" M	1/4" F	-	Yes	480.00

Balance Relief Valves

VS25 - Pressure Regulator Valve									
AL700	2,175	6.3	194° F	3/8" F	3/8" F	3/8" F	Yellow	-	$29.00
AL701	2,900	6.3	194° F	3/8" F	3/8" F	3/8" F	Red	-	29.00
AL702	3,650	6.3	194° F	3/8" F	3/8" F	3/8" F	Blue	-	29.00

Spray Guns

	Model	Max PSI	Max GPM	Max Temp	Inlet	Outlet	List Price
				Front Entry Trigger Gun, Light Duty			
	AL121	2,200	7.8	194°F	1/4" F	1/4" F	$23.00
	AL122	2,200	7.8	194°F	3/8" F	1/4" F	23.00
				Front Entry Trigger Gun, Light Duty			
	AL102	2,200	7.8	194°F	1/4" F	1/4" F	23.50
				Front Entry Trigger Gun, Light Duty			
	AL110	2,900	7.8	300°F	3/8" F	1/4" F	28.00
				Rear Entry Trigger Gun, Mid-Duty			
	ALSK1	3,200	6.6	300°F	3/8" F	1/4" F	24.50
	ALSK2	3,625	6.6	140°F	3/8" F	1/4" F	22.00
				Rear Entry Trigger Gun, Heavy Duty			
	AL101	3,650	10.5	300°F	3/8" F	1/4" F	38.50
				Rear Entry Trigger Gun, Heavy Duty *Z = Zytel "unbreakable" housing*			
	AL112	4,060	10.5	300°F	3/8" F	1/4" F	32.00
	AL112Z	4,060	10.5	300°F	3/8" F	1/4" F	34.00
	AL114Z	4,060	10.5	300°F	3/8" F	1/4" F	37.00
				Rear Entry Trigger Gun, Heavy Duty *Easy Pull Trigger - Anti-Fatigue* *W = Weeping Version* *Z = Zytel "unbreakable" housing* *SS = Stainless Steel 303*			
	AL19	4,500	8	300°F	3/8" F	1/4" F	35.00
	AL19W	4,500	8	300°F	3/8" F	1/4" F	39.00
	AL19Z	4,500	8	300°F	3/8" F	1/4" F	37.00
	AL19SS	4,500	8	300°F	3/8" F	1/4" F	225.00
NEW							
				Rear Entry Trigger Gun, Heavy Duty *Easy Pull Trigger - Antifatigue* *Safety Yellow housing color* *Stainless Steel - Inner tube* *Zytel "unbreakable" housing material*			
	AL35	5,000	8	300°F	3/8" F	1/4" F	38.50
				In-Line Rear Entry Trigger Gun, Heavy Duty			
	AL104-3/8	3,000	6.6	300°F	3/8" M	1/4" F	32.50

Spray Guns with Lance Extensions

	Model	Ext. Length	Max PSI	Max GPM	Max Temp	Inlet	Outlet	List Price
				Spray Gun with Lance Extension - Mid-Duty				
				SS = Stainless Steel				
	BIT101SS	12”	2,700	6.6	140°F	M22mm	22mmx1.5mmF	22.00
	BIT101-1/4	12”	2,700	6.6	140°F	1/4”	22mmx1.5mmF	22.00
	BIT101-3/8	12”	2,700	6.6	140°F	3/8”	22mmx1.5mmF	22.00
				Spray Gun with Lance Extension - Mid-Duty				
	AL9	14”	3,200	8	104°F	3/8” F	22mmx1.5mmF	28.00
	AL9-L	18”	3,200	8	104°F	3/8” F	22mmx1.5mmF	37.00
	AL9-L-1/4”	18”	3,200	8	104°F	1/4” F	22mmx1.5mmF	37.00
				Spray Gun with Lance Extension - Mid-Duty				
	ALSK1-SC7	14”	3,200	6.6	300ºF	3/8” F	22mmx1.5mmF	35.00
	ALSK2-SC7	14”	3,625	6.6	140ºF	3/8” F	22mmx1.5mmF	32.50
				Spray Gun with Lance Extension - Heavy Duty				
				22mm coupler for mounting extensions				
				Covered Airflow Handle				
				Z = Zytel “unbreakable” housing				
	AL200	14”	4,060	10.5	302°F	3/8” F	22mmx1.5mmF	46.00
				Spray Gun with Lance Extension - Heavy Duty				
				22mm coupler for mounting extensions				
				Covered Airflow Handle				
	AL19-SC6	13”	4,500	8	300°F	3/8” F	22mmx1.5mmF	48.00
	AL19-SC5	15”	4,500	8	300°F	3/8” F	22mmx1.5mmF	49.00

Lances-Extensions/Nozzle

	Model	Ext. Length	Max PSI	Max GPM	Max Temp	Inlet	Outlet	List Price
	Zinc lance extension							
	C = with 1/4" Quick Connect							
	AL248	24"	4,060	10.5	302°F	M22x1/4"	1/4" M	$12.00
	AL248-CS	18"	4,060	10.5	302°F	M22x1/4"	1/4" F QC	16.00
	AL248-C	24"	4,060	10.5	302°F	M22x1/4"	1/4" F QC	17.00
	Zinc lance, 15° bend with nozzle protector and 1/4" F nozzle bushing							
	AL245	16"	4,060	10.5	302°F	M22x1.5mm	1/4" F	11.75
	AL246	20"	4,060	10.5	302°F	M22x1.5mm	1/4" F	12.00
	Lance extension with vari-spray nozzle head, AL413R							
	Specify nozzle spray angle 0° to 45°							
	AL236	12"	3,625	5.5	140°F	M22x1.5mm	VSN	23.00
	AL237	18"	3,625	5.5	140°F	M22x1.5mm	VSN	25.00
	Matching lance for AL9 gun with AL413R vari-spray nozzle							
	Specify nozzle spray angle 0° to 50°							
	ALT10	18"	3,200	5.5	140°F	M22x1.5mm	VSN	28.00
	ALT10-L	20"	3,200	5.5	140°F	M22x1.5mm	VSN	30.00
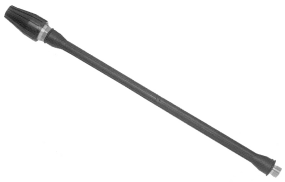								
	Lance with Turbo nozzle head							
	TTR16-SF220	18"	2,400	5.0	105º F	M22x1.5mm	TN	42.00
	TPR20-SF220	18"	2,400	5.5	105º F	M22x1.5mm	TN	59.00
	TPR22-SF220	18"	3,625	6.6	195º F	M22x1.5mm	TN	74.00

Dual Lance

Model	Ext. Length	Pipe Size	Max PSI	Max GPM	Max Temp	Inlet	Outlet	List Price
Pump action adjustable high/low valve - Dual lance extensions Zinc with protected aluminum cover								
ALLD102	24”	1/8”	3,200	10.5	140°F	M22mm	1/4” F	$34.00

Dual Lance extensions								
** = Protected*								
AL276 *	24” SS	1/4”	3,000	10.5	300°F	M22mm	2x1/4” F	50.00
AL278 *	24” Zinc	1/4”	3,000	10.5	300°F	M22mm	2x1/4” F	41.00
AL281	24” SS	1/8”	3,000	10.5	300°F	M22mm	2x1/8” F	46.00
AL282 *	24” Zinc	1/8”	3,000	10.5	300°F	M22mm	2x1/4” F	37.00
AL284 *	24” SS	1/8”	3,000	10.5	300°F	M22mm	2x1/4” F	46.00
AL285 *	24” SS	1/8”	3,000	10.5	300°F	M22mm	2x1/8” F	46.00
AL286 *	24” Zinc	1/8”	3,000	10.5	300°F	M22mm	2x1/4” F	40.00

Dual Lance extension - With Molded Grip								
AL330	40” SS	1/8”	3,000	10.5	300°F	1/4” M	2x1/4” F	54.00
AL333	40” Zinc	1/8”	3,000	10.5	300°F	1/4” M	2x1/4” F	49.00
AL334	40” Zinc	1/8”	3,000	10.5	300°F	1/4” M	2x1/8” F	49.00

Dual Lance extension with plastic cover over valve and enlarged nozzle protector for maximum operator comfort and safety								
** = Stainless Steel Seat*								
AL340	40” SS	1/8”	3,650	10.5	300°F	1/4” M	2x1/4” F	64.00
AL342	40” Zinc	1/8”	3,650	10.5	300°F	1/4” M	2x1/4” F	58.00
AL343	40” Zinc	1/4”	3,650	10.5	300°F	1/4” M	2x1/4” F	59.00
AL344 *	40” SS	1/4”	3,650	10.5	300°F	1/4” M	2x1/4” F	67.00

Dual Lance extension with plastic cover over valve and enlarged nozzle protector for maximum operator comfort and safety Stainless Steel Seat								
AL344LS	40” SS	1/4”	4,060	10.5	302°F	1/4” M	2x1/4 F	72.00
AL344LS-VPKIT	Includes wand, 1/4” quick connect and soap nozzle							82.00

Lances

Model	Ext. Length	Max PSI	Max GPM	Max Temp	Inlet	Outlet	List Price
			Zinc Lance				
AL290	16”	4,060	10.5	302° F	1/4” M	1/4” M	$5.75
AL291	20”	4,060	10.5	302° F	1/4” M	1/4” M	6.25
AL292	28”	4,060	10.5	302° F	1/4” M	1/4” M	7.25
AL293	36”	4,060	10.5	302° F	1/4” M	1/4” M	6.75
AL295	60”	4,060	10.5	302° F	1/4” M	1/4” M	9.00

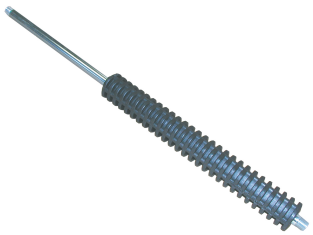

			Zinc Lance, Straight Lance, Molded Grip				
AL352	12”	4,060	10.5	302° F	1/4” M	1/4” M	9.50
AL307	16”	4,060	10.5	302° F	1/4” M	1/4” M	10.00
AL308	20”	4,060	10.5	302° F	1/4” M	1/4” M	10.75
AL309	28”	4,060	10.5	302° F	1/4” M	1/4” M	10.75
AL323	24”	4,060	10.5	302° F	1/4” M	1/4” M	9.50
AL324 (Grip is 7” from end)	36”	4,060	10.5	302° F	1/4” M	1/4” M	9.50
AL325	48”	4,060	10.5	302° F	1/4” M	1/4” M	15.00
AL326	59”	4,060	10.5	302° F	1/4” M	1/4” M	20.00
AL327	67”	4,060	10.5	302° F	1/4” M	1/4” M	23.00
AL328	79”	4,060	10.5	302° F	1/4” M	1/4” M	26.00

			Zinc Lance, 15° Bent Lance, Molded Grip				
AL323A	24”	4,060	10.5	302° F	1/4” M	1/4” M	11.50

			Stainless Steel Lance, Straight Lance, Molded Grip				
AL301	28”	4,060	10.5	302° F	1/4” M	1/4” M	17.00
AL302	36”	4,060	10.5	302° F	1/4” M	1/4” M	18.25
AL303	48”	4,060	10.5	302° F	1/4” M	1/4” M	27.00
AL304	59”	4,060	10.5	302° F	1/4” M	1/4” M	31.00
AL306	79”	4,060	10.5	302° F	1/4” M	1/4” M	37.50

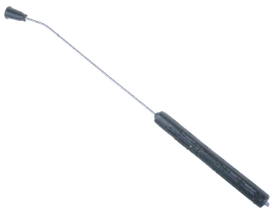

			Zinc Lance, 15° Bent Lance, Vented Grip, Nozzle Protector				
AL359 (Straight)	20”	4,060	10.5	302° F	1/4” M	1/4” F	15.75
AL360	28”	4,060	10.5	302° F	1/4” M	1/4” F	17.25
AL361 (Straight)	36”	4,060	10.5	302° F	1/4” M	1/4” F	18.00
AL362 (Straight)	48”	4,060	10.5	302° F	1/4” M	1/4” F	24.50
AL363	59”	4,060	10.5	302° F	1/4” M	1/4” F	28.00
AL365	79”	4,060	10.5	302° F	1/4” M	1/4” F	29.50

			Zinc Lance, 15° Bent Lance, Vented Grip				
AL360-SC8	28”	4,060	10.5	302° F	1/4” M	1/4” M	14.00
AL361-SC8 (Straight)	36”	4,060	10.5	302° F	1/4” M	1/4” M	15.00
AL362-SC8	48”	4,060	10.5	302° F	1/4” M	1/4” M	19.00
AL363-SC8	59”	4,060	10.5	302° F	1/4” M	1/4” M	22.00
AL365-SC8	79”	4,060	10.5	302° F	1/4” M	1/4” M	25.00

			Stainless Steel Lance, 15° Bent Lance, Vented Grip, Nozzle Protector				
AL367	36”	4,060	10.5	302° F	1/4” M	1/4” M	25.50

High Pressure Spray Nozzles - 1/4" Quick Connect

NEW

Model	Nozzle Size	List Price	Model	Nozzle Size	List Price	Model	Nozzle Size	List Price	Model	Nozzle Size	List Price
	0° Spray Angle Red			*15° Spray Angle Yellow*			*25° Spray Angle Green*			*40° Spray Angle White*	
NZ0003QC	3.0	$7.00	NZ1503QC	3.0	$7.00	NZ2502QC	2.0	$7.00	NZ4002QC	2.0	$7.00
NZ00035QC	3.5	7.00	NZ15035QC	3.5	7.00	NZ2503QC	3.0	7.00	NZ4003QC	3.0	7.00
NZ0004QC	4.0	7.00	NZ1504QC	4.0	7.00	NZ25035QC	3.5	7.00	NZ40035QC	3.5	7.00
NZ00045QC	4.5	7.00	NZ15045QC	4.5	7.00	NZ2504QC	4.0	7.00	NZ4004QC	4.0	7.00
NZ0005QC	5.0	7.00	NZ1505QC	5.0	7.00	NZ25045QC	4.5	7.00	NZ40045QC	4.5	7.00
NZ00055QC	5.5	7.00	NZ15055QC	5.5	7.00	NZ2505QC	5.0	7.00	NZ4005QC	5.0	7.00
NZ0006QC	6.0	7.00	NZ1506QC	6.0	7.00	NZ25055QC	5.5	7.00	NZ40055QC	5.5	7.00
NZ00065QC	6.5	7.00	NZ15065QC	6.5	7.00	NZ2506QC	6.0	7.00	NZ4006QC	6.0	7.00
NZ0007QC	7.0	7.00	NZ1507QC	7.0	7.00	NZ25065QC	6.5	7.00	NZ40065QC	6.5	7.00
NZ00075QC	7.5	7.00	NZ15075QC	7.5	7.00	NZ2507QC	7.0	7.00	NZ4007QC	7.0	7.00
NZ0008QC	8.0	7.00	NZ1508QC	8.0	7.00	NZ25075QC	7.5	7.00	NZ40075QC	7.5	7.00
NZ0010QC	10.0	7.00	NZ1509QC	9.0	7.00	NZ2508QC	8.0	7.00	NZ4008QC	8.0	7.00
NZ0012QC	12.0	7.00	NZ1510QC	10.0	7.00	NZ2509QC	9.0	7.00	NZ4009QC	9.0	7.00
			NZ1512QC	12.0	7.00	NZ2510QC	10.0	7.00	NZ4010QC	10.0	7.00
			NZ1515QC	15.0	7.00	NZ2512QC	12.0	7.00	NZ4012QC	12.0	7.00
									NZ4015QC	15.0	7.00

High Pressure Spray Nozzles - 1/4" M MEG

NEW

	0° Spray Angle			*15° Spray Angle*			*25° Spray Angle*			*40° Spray Angle*	
NZ0003	3.0	$6.75	NZ1503	3.0	$6.75	NZ2503	3.0	$6.75	NZ4003	3.0	$6.75
NZ00035	3.5	6.75	NZ15035	3.5	6.75	NZ25035	3.5	6.75	NZ40035	3.5	6.75
NZ0004	4.0	6.75	NZ1504	4.0	6.75	NZ2504	4.0	6.75	NZ4004	4.0	6.75
NZ00045	4.5	6.75	NZ15045	4.5	6.75	NZ25045	4.5	6.75	NZ40045	4.5	6.75
NZ0005	5.0	6.75	NZ1505	5.0	6.75	NZ2505	5.0	6.75	NZ4005	5.0	6.75
NZ00055	5.5	6.75	NZ15055	5.5	6.75	NZ25055	5.5	6.75	NZ40055	5.5	6.75
NZ0006	6.0	6.75	NZ1506	6.0	6.75	NZ2506	6.0	6.75	NZ4006	6.0	6.75
NZ00065	6.5	6.75	NZ15065	6.5	6.75	NZ25065	6.5	6.75	NZ40065	6.5	6.75
			NZ1510	10.0	6.75						

High Pressure Spray Nozzles - Soap Nozzles

NEW

	Model	Nozzle Size	Spray Angle	List Price		Model	Nozzle Size	Spray Angle	Connect Size	List Price
	Quick Connect Nozzle					*MEG Nozzle*				
	NZ2540QCS	40.0	25°	$7.00		NZ4040S	40.0	40°	1/4M	4.90
	NZ5050QCS	50.0	50°	7.00		NZ6540S	40.0	65°	1/8M	4.60
	NZ6540QCS	40.0	65°	7.00		NZ8040S	40.0	80°	1/4M	4.60

High Pressure Spray Nozzles - Multi Packs*

NEW

	Model	Nozzle Size	List Price		Model	Nozzle Size	List Price
	4 -Pack - 1/4" Quick Connect MEG Nozzles Includes 0° - 40° Spray Angle Nozzle				*4-Pack 1/4" MEG Nozzles Includes 0° - 40° Spray Nozzles*		
	NZQC4P-030	3.0	30.00		NZMEG4P-030	3.0	29.00
	NZQC4P-035	3.5	30.00		NZMEG4P-035	3.5	29.00
	NZQC4P-040	4.0	30.00		NZMEG4P-040	4.0	29.00
	NZQC4P-045	4.5	30.00		NZMEG4P-045	4.5	29.00
	5-Pack - 1/4" Quick Connect MEG Nozzles Includes 0° - 40° Spray Angle Nozzle and 50° Spray Angle Soap Nozzle				*5-Pack - 1/4" MEG Nozzles Includes 0° - 40° Spray Angle Nozzle and 40° Spray Angle Soap Nozzle*		
	NZQC5P-030	3.0	37.00		NZMEG5P-030	3.0	34.00
	NZQC5P-035	3.5	37.00		NZMEG5P-035	3.5	34.00
	NZQC5P-040	4.0	37.00		NZMEG5P-040	4.0	34.00
	NZQC5P-045	4.5	37.00		NZMEG5P-045	4.5	34.00

* Additional nozzle size multi packs available upon request

Cleaning Heads NEW

Model	PSI	GPM	Min. Pass thru Hole	Inlet	Temp	List Price
	Self spinning washing heads for containers open on one side. Reduce water consumption by not washing an area of 120° wide at the base of the spray head keeping spray in the container. With a spinning speed of 120 g/min. Aqua Motor.					
BISW060	2,900	3.9 - 15.8	3.93”	1/2” F	194° F	$ 6,590.00
BISW120OB	2,900	7.9 - 31.7	6.29”	1/2” F	194° F	7,370.00
	Self spinning washing head completely made of stainless steel without any kind of lubricant oils or greases. Application recommended for big containers in food processing, beverage, chemical, pharmaceutical industries and truck and rail tankers. Aqua Motor.					
BIRW086	75 - 2,900	2.1 - 15.8	5.27”	1/2” F	194° F	6,840.00
BIRW200	75 - 2,900	15.8 - 52.8	5.27”	1” F	194° F	7,460.00
	Self spinning head for washing medium-large containers (tank trucks, urban refuse containers, silos). With a spinning speed of 2-12 g/min for the FV020 and 10-30 g/min for the FV025. Aqua Motor.					
BIFV020-50	725	52.8	6.69”	1/2”	194° F	4,820.00
BIFV020-200	2,900	52.8	6.69”	1/2”	194° F	5,440.00
BIFV020-400	5,800	52.8	6.69”	1/2”	194° F	6,390.00
BIFV025-50	2,900	52.8	6.69”	1/2”	194° F	4,720.00
BIFV025-200	2,900	52.8	6.69”	1/2”	194° F	5,440.00
BIFV025-400	5,800	52.8	6.69”	1/2”	194° F	6,290.00
	Self spinning head for washing medium-large containers (tank trucks, urban refuse containers, silos). Aqua Motor.					
BIRW220	72 - 435	15.8 - 52.8	11.02”	1” F	194° F	8,030.00
BIRW240	72 - 435	15.8 - 52.8	13.78”	1” F	194° F	8,480.00
	Self rotating cleaning head working at a set, constant rotating speed. Ideal for “Car Wash”, portal and underbody washing systems. With a spinning speed of 65-125 g/min for the PW060LC and 100-140 for the PW063LC. Aqua Motor.					
BIPW060LC	435 - 2,900	3.9 - 15.8	-	-	-	2,640.00
BIPW063LC	29 - 435	7.9 - 15.8	-	-	-	2,870.00
	Round shaped washing heads (without protrusions) for medium-small containers. Especially suited for fitting to automatic systems. E=Electric Motor - P=Air Motor - A=Aqua Motor.					
BIXB030E	2,900	7.9	1.57”	1/2”	194° F	4,360.00
BIXB030P	2,900	7.9	1.57”	1/2”	194° F	6,410.00
BIXB030A	2,900	7.9	1.57”	1/2”	194° F	7,770.00
	Round shaped washing heads (without protrusions) for medium-large containers. Especially suited for fitting to automatic systems. E=Electric Motor - P=Air Motor - A=Aqua Motor.					
BIXB060E	2,900	15.8	1.96”	1/2”	194° F	4,980.00
BIXB060P	2,900	15.8	1.96”	1/2”	194° F	7,390.00
BIXB060A	2,900	15.8	1.96”	1/2”	194° F	8,470.00
	Washing head for medium-small containers with minimum 57 mm diameter pass-through hole. E=Electric Motor - P=Air Motor.					
BIRC030E	2,900	7.9	2.24”	1/2”	194° F	3,830.00
BIRC030P	2,900	7.9	2.24”	1/2”	194° F	5,660.00
	Washing head for medium-large containers with minimum 57 mm diameter pass-through hole. E=Electric Motor - P=Air Motor - A=Aqua Motor.					
BIXC060E200	2,900	15.8	2.24”	1/2”	194° F	4,080.00
BIXC060ETK	2,900	15.8	2.24”	1/2”	194° F	5,250.00
BIXC060E400	5,800	15.8	2.24”	1/2”	194° F	5,720.00
BIXC060P200	2,900	15.8	2.24”	1/2”	194° F	6,130.00
BIXC060PTK	2,900	15.8	2.24”	1/2”	194° F	7,230.00
BIXC060P400	5,800	15.8	2.24”	1/2”	194° F	7,260.00
BIXC060A200	2,900	15.8	2.24”	1/2”	194° F	7,630.00
BIXC060ATK	2,900	15.8	2.24”	1/2”	194° F	8,680.00
	Washing head for small containers with minimum 40 mm diameter pass-through hole.					
BIROTY018	2,176	4.7	1.57”	3/8” F	194° F	1,740.00

Nozzle Holders

	Model	Max PSI	Max GPM	Max Temp	Inlet	Outlet	List Price
				Adjustable Hi/Low Nozzle Holder			
	AL410N	3,650	7.8	300° F	1/4" F	1/4" F	$11.25
				Adjustable Hi/Low Nozzle Holder With Nozzle Protector			
	AL414	3,650	7.8	300° F	1/4" F	1/4" F	13.00
				Change Over Nozzle			
	AL416	2,900	8.0	300° F	1/4" F	2x1/4" F	22.50

Lance Fittings

	Model	Description	List Price
	AL14TP	Nozzle protector, 1/4"	$3.15
	AL1814	Nozzle bushing, 1/8" F x 1/4" F	2.50
	AL1818	Nozzle bushing, 1/8" F x 1/8" F	2.50
	AL1414	Nozzle bushing, 1/4" F x 1/4" F	2.95

Vari-Spray Nozzle Heads

	Model	Max PSI	Max GPM	Inlet	Max Temp	List Price
			0° - 50° Spray Pattern (specify orifice size)			
	AL413R	3,200	5.5	1/4" F	140° F	$18.00

Turbo Nozzles

Model	Max PSI	Orifice Size	Nozzle Size	Color ID	List Price
AL-TTR14 Turbo Nozzle, 1/4" F inlet, Stainless Steel Orifice 105° F temp. max					
AL-TTR14-15	2,030	1.15 mm	2.7	purple	$25.00
AL-TTR14-20	2,030	1.20 mm	3.0	yellow	25.00
AL-TTR14-25	2,030	1.25 mm	3.5	green	25.00
AL-TTR14-30	2,030	1.30 mm	3.8	orange	25.00
AL-TTR14-35	2,030	1.35 mm	4.0	blue	25.00
AL-TTR14-40	2,030	1.40 mm	4.5	beige	25.00
AL-TTR14-45	2,030	1.45 mm	4.8	dark yellow	25.00
AL-TTR16 Turbo Nozzle, 1/4" F inlet, Stainless Steel Orifice 105°F temp. max					
AL-TTR16-15	2,320	1.15 mm	2.7	purple	28.00
AL-TTR16-20	2,320	1.20 mm	3.0	yellow	28.00
AL-TTR16-25	2,320	1.25 mm	3.5	green	28.00
AL-TTR16-30	2,320	1.30 mm	3.8	orange	28.00
AL-TTR16-35	2,320	1.35 mm	4.0	blue	28.00
AL-TTR16-40	2,320	1.40 mm	4.5	beige	28.00
AL-TPR20 Turbo Nozzle, 1/4" F inlet, Ceramic Orifice 105°F temp. max					
AL-TPR20-30	2,900	1.30 mm	3.8	yellow	45.00
AL-TPR20-50	2,900	1.50 mm	5.0	green	45.00
AL-TPR25 Turbo Nozzle, 1/4" F inlet, Ceramic Orifice 195°F temp. max					
AL-TPR25-30	3,625	1.30 mm	3.8	yellow	60.00
AL-TPR25-40	3,625	1.40 mm	4.5	beige	60.00
AL-TPR25-50	3,625	1.50 mm	5.0	green	60.00
AL-TPR25-60	3,625	1.60 mm	6.0	black	60.00
AL-TPR25-70	3,625	1.70 mm	7.5	red	60.00
AL-TPR30 Turbo Nozzle, 1/4" F inlet, Ceramic Orifice 195°F temp. max					
AL-TPR30-30	4,500	1.30 mm	3.8	yellow	85.00
AL-TPR30-40	4,500	1.40 mm	4.5	beige	85.00
AL-TPR30-50	4,500	1.50 mm	5.0	green	85.00
AL-TPR30-60	4,500	1.60 mm	6.0	black	85.00
AL-TPR30-70	4,500	1.70 mm	7.5	red	85.00

Turbo Nozzle Inline Filters

	Model	Max PSI	Max GPM	Max Temp	Inlet	Outlet	List Price
	Stainless Steel Inline Water Filter (100 Mesh) for Turbo Nozzles						
	AR3500-QC	5,000	8	212° F	1/4" QC	1/4" M	$17.50
	Stainless Steel inline water filter (100 Mesh) for Turbo Nozzles						
	AR3500	5,000	8	212° F	1/4" F	1/4" M	18.50

Thermal Relief Valve

TPP140	200	-	140° F	1/2" M	-	$8.90
TPP140 3/8"	200	-	140° F	3/8" M	-	8.90
TPP140 1/4"	200	-	140° F	1/4" M	-	8.90

Easy Start Valve

AR4000-1	5,000	5	300° F	3/8" M	1/4" Hose Barb	$9.20

Shut off 120 PSI and Reopens 100 PSI

Safety Release Valve

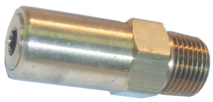

AR5000-1	1,000 - 4,000	6	200° F	3/8" M	-	$13.70

Pressure Switches

	Model	Activation PSI	Max PSI	Volts	Amps	Max Temp	Connection	List Price
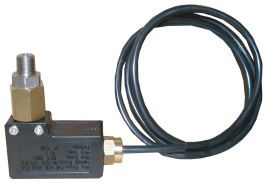	*Brass Pressure Switch with 45" cord*							
	AL680	435	3,650	250	15	190° F	1/4" M	$26.00
	AL681	435	3,650	250	15	190° F	3/8" M	26.00
	Brass Pressure Switch with 45" cord							
	AL690	217.5	3,650	250	15	194° F	1/4" M	20.50
	AL691	217.5	3,650	250	15	194° F	3/8" M	20.50
NEW	*Brass Pressure Switch with 45" cord*							
	AL692	362.5	3,650	250	15	194° F	1/4" M	20.50
	AL693	362.5	3,650	250	15	194° F	3/8" M	20.50
	Brass Pressure Switch with 45" cord							
	AL694	652.5	3,650	250	15	194° F	1/4" M	20.50
	AL695	652.6	3,650	250	15	194° F	3/8" M	20.50

INJECTORS (WITH CERAMIC ORIFICES)

	Model	Adjustment	GPM	PSI	Inlet	Outlet	Orifice Size	Color ID	List Price
	AL471	Fixed	2-3	4000	3/8" M	3/8" M	1.8 mm	green	$12.50
	AL475	Fixed	3-4	4000	3/8" M	3/8" M	2.1 mm	red	12.50
	AL476	Fixed	4-5.5	4000	3/8" M	3/8" M	2.3 mm	blue	12.50
	AL472	Adjustable	2-3	4000	3/8" M	3/8" M	1.8 mm	green	14.00
	AL477	Adjustable	3-4	4000	3/8" M	3/8" M	2.1 mm	red	14.00
	AL478	Adjustable	4-5.5	4000	3/8" M	3/8" M	2.3 mm	blue	14.00
	AL473	Fixed	2-3	4000	3/8" F	3/8" M	1.8 mm	green	13.00
	AL479	Fixed	3-4	4000	3/8" F	3/8" M	2.1 mm	red	13.00
	AL480	Fixed	4-5.5	4000	3/8" F	3/8" M	2.3 mm	blue	13.00
	AL474	Adjustable	2-3	4000	3/8" F	3/8" M	1.8 mm	green	14.50
	AL481	Adjustable	3-4	4000	3/8" F	3/8" M	2.1 mm	red	14.50
	AL482	Adjustable	4-5.5	4000	3/8" F	3/8" M	2.3 mm	blue	14.50

LINE STRAINERS

	Model	Max PSI	Max GPM	Mesh	Inlet	Outlet	List Price
	Brass Line Strainer, Cone filter, one 1/4" side port						
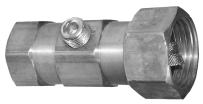	AR3000-1	250	7	.50	1/2" F	1/2" M	$18.00
	Aluminum Line Strainer, Cuffed filter, two 1/4" side ports						
	AR3000-A2	100	8	.60	1/2" F	1/2" M	14.50
	Aluminum Line Strainer, Stainless Steel GHT Tension Spring Cuffed filter two 1/4" side ports - Garden Hose Adapter						
	AR3000-A2G	100	8	.60	1/2" F	1/2" M	15.50
	Aluminum Line Strainer, Cuffed filter, one 1/4" side port Garden Hose Adapter						
	AR3000F-A1G	100	8	.60	1/2" F	1/2" F	19.00

Ball Quick Couplings

	Model	Max PSI	Max Temp	Inlet	List Price
			Ball Quick Coupling		
			Viton O-Rings, Stainless Steel Ball Bearings		
	AL-QC1/4	4,000	300° F	1/4" F	$5.25
	AL-QC1/4M	4,000	300° F	1/4" M	5.75
			Ball Quick Coupling		
			Viton O-Rings, Stainless Steel Ball Bearings		
	AL-QC3/8	4,000	300° F	3/8" F	6.25
	AL-QC3/8M	4,000	300° F	3/8" M	7.00
			Quick Coupling Plug		
	AL-PLUG1/4	4,000	300° F	1/4" F	1.85
	AL-PLUG1/4M	4,000	300° F	1/4" M	1.85
			Quick Coupling Plug		
	AL-PLUG3/8	4,000	300° F	3/8" F	2.15
	AL-PLUG3/8M	4,000	300° F	3/8" M	2.15
			Replacement O-Rings		
	AL-QCO1/4	1/4" Buna O-Ring			.17
	AL-QCO3/8	3/8" Buna O-Ring			.17
	AL-QCOKIT1/4	1/4" Buna O-Ring Kit of 25			4.10
	AL-QCOKIT3/8	3/8" Buna O-Ring Kit of 25			4.10
	AL-QCO1/4V	1/4" Viton O-Ring			.40
	AL-QCO3/8V	3/8" Viton O-Ring			.44

Garden Hose Adapters

	Model	Description	List Price
		3/4" F x M	
	AR7366	Nut	$2.00
		3/8" M and 1/2" M	
	AR7365	Nipple 3/8" M	1.70
	AR7368	Nipple 1/2" M	1.90
		3/4" F x M, 1/2" M Nipple	
	AR7300	Nut, with stainless tension spring	3.50
		3/4" F x 3/4" F	
	AR2605B	G.H.A. brass swivel, cone filter	10.25
		3/4" F x 1/2" F	
	AR1264750	G.H.A. brass swivel, cone filter	5.70
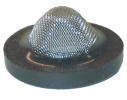	AR7369	Washer with cone filter	.50

Sandblast Kits

	Model	Description	List Price
	AL420	***Sandblasting nozzle w/Sand Probe*** ***Carbide tip*** 3,650 PSI Max (specify nozzle size) Nozzle size 3.0, 1.2 mm orifice Nozzle size 3.5, 1.3 mm orifice Nozzle size 4.0, 1.4 mm orifice Nozzle size 4.5/5.0, 1.5 mm orifice Nozzle size 6.0, 1.6 mm orifice	$97.00
NEW 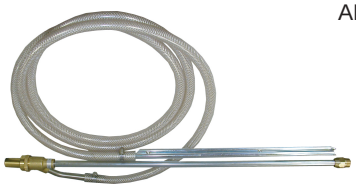	AL420-Kit	***Sandblasting Kit - Sandblasting Nozzle*** w/Sand Poker 10' Sand Hose, and 24" lance ext. 22mmx1/4"M ***Carbide tip*** 3,650 PSI Max Nozzle size 4.5/5.0, 1.5 mm orifice	$130.00
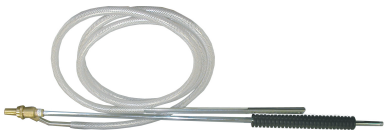	AL4721000-C	***Sandblasting Kit - Sandblasting nozzle w/Sand Poker*** 10' Sand Hose, and 36" lance ext. 22mm - M-inlet ***Carbide tip*** 3,500 PSI Max (specify nozzle size) Nozzle size 3.0, 1.2 mm orifice Nozzle size 3.5, 1.3 mm orifice Nozzle size 4.0, 1.4 mm orifice Nozzle size 4.5/5.0, 1.5 mm orifice Nozzle size 6.0, 1.6 mm orifice	138.00
	AR400	***Industrial Sandblasting Kit*** ***Sandblasting nozzle, w/Sand Probe*** 25' Sand Hose, adjustable sand intake, ***Carbide tip*** 1/4" F outlet for 0° meg nozzle	460.00
NEW 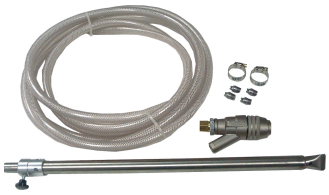	AL-TPS450KIT	***Fan Spray*** ***Industrial Sandblasting Kit*** ***Sandblasting nozzle w/Sand Poker*** 25' Sand Hose, adjustable sand intake, ***Carbide tip*** 1/4" F outlet for 5°-10° meg nozzle (includes 4-IMEG nozzles, 5° spray angle, sizes .03, .04, .05 and .06)	495.00
	AL-TPS450	***Fan Spray Sandblasting Head 5°-10° and Probe*** 1/4" F inlet, 6,500 PSI, 194° F	395.00
	AR3187	***Sandblasting Kit - Sandblasting nozzle w/Sand Probe*** 10' Sand Hose, and 12" lance ext. 22mm - M-inlet ***Carbide tip*** 1,300 PSI Max, 2.1 GPM	95.00

Swivel Coupler/Quick Couplings & Plugs

	Model	Max PSI	Max GPM	Max Temp	Inlet	Outlet	List Price
				Swivel Coupler			
	AL443	3,000	7.8	300° F	3/8” M	3/8” F	$7.85
NEW				*Quick Coupling - AL450/2 has 2 O-Rings/Backup Rings*			
	AL450	3,650	7.8	300° F	1/4” F	22mmx1.5 F	6.00
	AL450/2	3,650	7.8	300° F	1/4” F	22mmx1.5 F	7.50
				Quick Coupling			
	AL451	3,650	7.8	300° F	1/4” M	22mmx2.5 F	6.10
				Quick Coupling			
	AL452	3,650	7.8	300° F	3/8” M	22mmx1.5 F	8.70
	AL453	3,650	7.8	300° F	3/8” F	22mmx1.5 F	8.70
				Quick Coupling Plug - Fixed F=Flared			
	AL454	3,650	7.8	300° F	1/4” F	22mmx1.5 M	2.80
	AL455F	3,650	7.8	300° F	1/4” M	22mmx1.5 M	2.80
	AL456	3,650	7.8	300° F	3/8” F	22mmx1.5 M	2.80
	AL457	3,650	7.8	300° F	3/8” M	22mmx1.5 M	2.80
				Swiveling Quick Coupling			
	AL460	3,650	7.8	300° F	1/4” M	1/2” F	7.35
				Three Piece Swinging Quick Coupler			
	AL461	3,650	7.8	300° F	3/8” M	1/2” F	10.75
	AL462	3,650	7.8	300° F	3/8” F	1/2” F	10.75
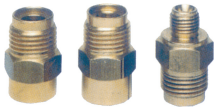				*Quick Coupling Plug*			
	AL463	3,650	7.8	300° F	1/4” F	1/2” M	3.25
	AL464	3,650	7.8	300° F	3/8” F	1/2” M	3.25
	AL465	3,650	7.8	300° F	3/8” M	1/2” M	3.25
				Plug Adapter			
	AR1263640	4,000	8.0	300° F	22mm F	3/8” M	8.50

Accessories

Pressure Gauges

Model	Case Diameter	Max Pressure PSI	Case Material	Graduation Major	Graduation Minor	Connection Size	List Price
AR0-300	2 1/2”	0 - 300	304 S.S.	50	5	1/4”	$24.00
AR0-600	2 1/2”	0 - 600	304 S.S.	100	10	1/4”	24.00
AR0-1000	2 1/2”	0 - 1,000	304 S.S.	200	20	1/4”	24.00
AR0-1500	2 1/2”	0 - 1,500	304 S.S.	200	20	1/4”	24.00
AR0-2000	2 1/2”	0 - 2,000	304 S.S.	500	50	1/4”	24.00
AR0-3000	2 1/2”	0 - 3,000	304 S.S.	500	50	1/4”	24.00
AR0-5000	2 1/2”	0 - 5,000	304 S.S.	1,000	100	1/4”	24.00
AR0-6000	2 1/2”	0 - 6,000	304 S.S.	1,000	100	1/4”	24.00
AR0-10000	2 1/2”	0-10,000	304 S.S.	1,000	100	1/4”	24.00

Pressure Gauges with Rear Mount

AR3223A	1 1/2”	2,500	Plastic	500	50	1/8” M	$30.00
AR3223C	1 1/2”	3,000	304 S.S.	500	50	1/8” M	34.00

Threaded Valve Cap NEW

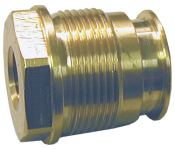

Model	Description	List Price
	Threaded Valve Caps	
AR1260162T	XT, XM series: 1/4” NPT TAP Brass	$7.00
AR1260163	XT, XM series: 1/8” NPT TAP Brass	10.31
AR960090T	RK series: 1/4” TAP Brass	12.00
AR1941970	XW series: 1/4” NPT TAP Brass	14.40
AR960850T	RK series: 1/4” NPT TAP 303 Stainless Steel	19.60

Jetter Valve NEW

	Valve Disabler Pulse Valve with Adjustable Lever	
AR40235	XT, XM: pump disabler 3,000 PSI	$54.00
AR40161	RK: pump disabler 3,000 PSI	59.00
AR40236	XW: pump disabler 3,000 PSI	63.00

Suction Filter and Detergent Hose

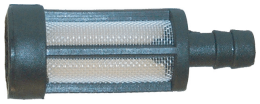

NEW

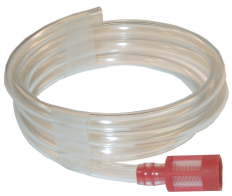

	1/4” Barb	
AR1341030	Detergent intake strainer *(red)*	$1.90
	1/4” Barb	
AL470	Detergent intake strainer *(black)*	2.00
	Filter with Check Valve	
AR3116	Detergent suction filter with check valve (brass)	12.00
	1/4” I.D. x 3/8” O.D.	
DETHOSE - FIL4	4’ Hose, with AR1341030 detergent strainer	4.25
DETHOSE - FIL5	5’ Hose, with AR1341030 detergent strainer	4.75
DETHOSE - FIL6	6’ Hose, with AR1341030 detergent strainer	5.00
DETHOSE - 4	4’ Hose	1.75
DETHOSE - 5	5’ Hose	1.80
DETHOSE - 6	6’ Hose	2.10
DETHOSE - 100	100’ Hose	27.00

Oil Resistant Synthetic Rubber Hose

Model	Length	PSI	Inner Diameter	Inlet	Outlet	List Price
FT251420	25’	2,000	1/4”	22x14mm	1/4” F	$27.00
FT251420MM-MM	25’	2,000	1/4”	22x14mm	22mm	30.00
FT251420-15MM	25’	2,000	1/4”	22x15mm	1/4” F	32.50
FT251485MM-MM	25’	2,600	1/4”	22x14mm	22x14mm	39.50
FT2551620	25’	2,000	5/16”	22x14mm	1/4” F	41.00
FT301424MM-MM	30’	2,600	1/4”	22x14mm	22x14mm	40.00
FT3051620-38	30’	2,000	5/16”	22x14mm	3/8” M Swivel	73.00

Braided Rubber Hose (Swivels on Both Ends)

AR253830SSP	25’	3,000	3/8”	3/8” M	3/8” M	$78.00
P2538-14-22M	25’	3,000	3/8”	22mm	3/8” M	68.00
P3038-14-22M	30’	3,000	3/8”	22mm	3/8” M	72.00
AR303830SSP	30’	3,000	3/8”	3/8” M	3/8” M	90.00
AR403830SSP	40’	3,000	3/8”	3/8” M	3/8” M	100.00
AR403840SSP	40’	4,000	3/8”	3/8” M	3/8” M	109.00
AR503830SSP	50’	3,000	3/8”	3/8” M	3/8” M	120.00
AR753830SSP	75’	3,000	3/8”	3/8” M	3/8” M	160.00
AR1003830SSP	100’	3,000	3/8”	3/8” M	3/8” M	190.00

Drain Cleaner Hose Kits

Model	Length	PSI	GPM	Hose Size	Adapts To Coupler	List Price
AR3172	27’	1,500	2	3/16”	22mm	$53.00
AR3172-50	50’	1,500	2	3/16”	22mm	95.00
AR3172-75	75’	1,500	2	3/16”	22mm	120.00
AR3172-100	100’	1,500	2	3/16”	22mm	145.00

Cart Assemblies

	Model	Description	List Price
	AR-CART	***Electric Unit Cart*** TRX-HPV-KBG-VIP ***Overall dimensions:*** 17”L x 13”W x 32.5”H ***Platform:*** 12.5”L x 8”W ***Handle:*** 32.5”H ***Tires:*** 8”H x 2.75”W rubber ***Color:*** Black	$135.00
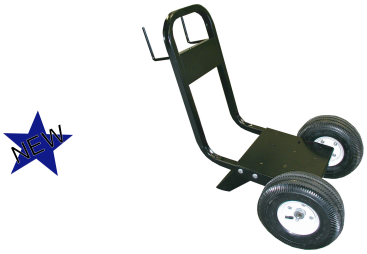	AR-CART5	***Pressure Washer Cart*** Gas or Electric C56 Frame Units ***Overall dimensions:*** 24”L x 11”W x 24”H ***Platform:*** 10.5”L x 10.5”W ***Handle:*** 17”H ***Tires:*** 10”H x 3”W pneumatic ***Color:*** Black	145.00
	AR-CART11	***Pressure Washer Cart:*** ***Overall dimensions:*** 36”L x 22”W x 36”H ***Platform:*** 19”L x 13”W ***Handle:*** 32”H ***Tires:*** 10”H x 3”W pneumatic ***Color:*** Red	170.00

Pressure Washer Accessories

	14880RT-UR-C	***Ground Fault Circuit Interrupter*** Right Angle & In-Line	$37.00
	14880RT30-UR-C	***Ground Fault Circuit Interrupter*** Right Angle In-Line 30’ 16 gauge cord	49.00
	BITKIT	***Pressure Washer Gun/Wand/Hose Kit*** Spray Gun with Lance Extension Gun: M22mm inlet, 2,500 PSI Lance: 18” with Vari-Spray Nozzle Hose: 25’ 1/4”	84.00

Rotating Brushes

	Model	Description	List Price
	GF3110	Direct drive rotary brush with fixed straight handle	$16.00
	GF3124	Gear driven rotary brush with fixed straight handle	21.50
	GF3125	Gear driven rotary brush with swivel joint handle	27.00
	ALAA1	Rotary brush, professional, 1/4” M inlet, 435 PSI, 86° F temp. max	44.00

Fixed Brushes

	GF3218	One piece utility brush	$4.95
	GF3200	Standard fixed broom brush	12.00

Foamer

	AL22-TLS	Foamer, 22mm brass inlet	$18.00

Extensions

	Model	Description	List Price
		20" Extension Rod	
	GF3300	Aluminum fixed	$6.50
		20" Extension Rod	
	GF3305	Aluminum swivel joint	8.00
		24" Extension Rod	
	GF3310	Aluminum coated fixed	11.70
		24" Extension Rod	
	GF3315	Aluminum coated swivel joint	13.00
		Dispenser	
	GF5800	Liquid Soap Dispenser	16.00
	GF3401	Angled nozzle used w/GF3800	.60

Adapters

	GF3036	Garden hose adapter with shut off valve	$4.10
	GF3005	Quick connector with filter (brush x GHT)	2.30
	GF0421	22mm M x 1.5 F adapter	1.50
	GF0424	KEW bayonet adapter	1.90
	GF0442	ArrowLine bayonet adapter	1.90
	GF0437	M adapter - fits AR215	1.80
	GF3433	Click F - nipple x 3/4" F threads	.55
	GF3434	Click F - nipple x 3/4" M threads	.60
	AR3400	1/4" M x 22mm F coupler	11.00

Portable Electric Pressure Washers

Portable Compact Pressure Washers

	Model	Description	List Price
	ARTIKA **ARTIKA-TSS**	***1.6 GPM, 1,200 PSI, 1.3 HP, 12.5 amps, 36 lbs.*** ***Equipped with:*** • Detergent injector kit / 18oz bottle • Automatic safety valve with low pressure bypass • Water filter • Motor thermal protector • Adjustable spray head • High Pressure, 25' hose, gun and lance • Garden Hose Adapter, filter • 35' 8" GFCI Cord	$400.00 425.00
	VIP	***2.1 GPM, 1,300 PSI, 1.7 HP, 15 amps, 48 lbs.*** ***Equipped with:*** • Triplex pump with ceramic plungers, connecting rod system • Pressure adjustment • Built-in detergent suction • Pressure gauge • Motor thermal protector • Detergent tank 7oz • High Pressure, 25' hose, gun and lance • High/low pressure adjustable spray head • Garden Hose Adapter, filter • 35' GFCI Cord	715.00
	TRX	***2.1 GPM, 1,500 PSI, 2 HP, 19 amps, 57 lbs.*** ***Equipped with:*** • Triplex pump with ceramic plungers, connecting rod system • Pressure adjustment • Built-in detergent suction - 18oz • Detergent tank • 25' Hose, gun, lance • Vari-spray nozzle head • Garden Hose Adapter, filter • 89" GFCI Cord	760.00
	KBG-Brass	***2.1 GPM, 1,500 PSI, 2 HP, 19 amps, 57 lbs.*** ***Equipped with:*** • Triplex pump with ceramic plungers, connecting rod system • Pressure adjustment • Built-in detergent suction • Pressure gauge • Motor thermal protector • 25' Hose, gun, lance • Vari-spray nozzle head • Garden Hose Adapter, filter • 90" GFCI Cord	805.00

How to Read AR North America Pump Numbers

Example

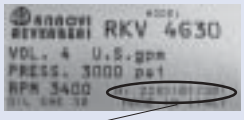

RK = SERIES OF PUMP

V = INDICATES 3400 RPM

4G = FOUR GALLONS PER MINUTE

RKV4G30AD – F24C2I

I = INJECTOR

C2 = GYMATIC UNLOADER

Serial Number

30 = PSI x 100

D = 1" I.D. SHAFT

F24 = GAS FLANGE

Suffix Meanings

SERIES OF PUMPS

XP	XT
XB	XM
SJ	RK
XJ	XW
BK	SX

RPM RATINGS

A = 1750 RPM

V = 3400 RPM

RK, SX, XW, XM, XR, XT = 1450 RPM

XP, XB = 3400 RPM

SHAFT SIZES

N = Natural Shaft
24mm solid shaft

E = Electric Shaft
5/8", 1-1/8" hollow shaft

D = Direct Gas Drive Shaft
3/4", 1", 7/8" hollow shaft

UNLOADER CODES

M2 = Minimatic

C2 = Gymatic

VR = VR35

PUMP HEAD TYPES

Anodized Aluminum

B = Forged Brass (XTA2G15E**B**A-F8)

H = Nickel Plated (RK1528**H**N)

CONNECTING RODS

A = Aluminum (RKV4G30**A**D-F24)

GEAR BOXES

CR = Gear Box (RKA4G30N-**CR**)

FLANGE TYPES

F7 = Flange for XTV, XJV Series "D" Version for Close Coupling to Gas Engine (3/4" I.D. Shaft).

F8 = Flange for XTA, XTV, XJV Series "E" Version for Close Coupling to NEMA 56 - C Motors (5/8" I.D. Shaft).

F14 = Bell Housing and Flexible Coupling Set for XRCA Series for NEMA 182-184 (1-1/8" I.D. Shaft).

F15 = Bell Housing and Flexible Coupling Set for XRCA Series for NEMA 213-215 (1-3/8" I.D. Shaft).

F17 = Flange for RKA, XRCA Series "E" Version for Close Coupling to NEMA 182-184.

F23 = 5/8" Hollow Shaft Close Couple to XMV Pump.

F24 = Flange for RKV, XRCV, XMV Series "D" Version for Gas Engine (1" I.D. Shaft).

F25 = Flange for XMV Series "D" Version for Gas Engine (3/4" I.D. Shaft).

F27 = Flange for XJW Series "D" Version for Vertical Gas Engine (7/8" I.D. Shaft).

F33 = NEMA 56-C Flange for XM Series "E" Version (5/8" I.D. Shaft).

F35 = Flange for GRKV Series "V" Version for Tapered Gas Engines (1" I.D. Shaft).

AR Pump Care

- To prevent freezing use Environmentally Friendly or R.V. Antifreeze. (Always use for winter storage.)
- Change oil every 3-5 months or every 500 hours of operation (initial break-in oil change after first fifty hours).
- Flush water valves and detergent injectors with plain water on a regular basis after use.
- Use Line Strainer, 50 mesh minimum.
- Never store pump with water in it.
- Consult local service dealer or AR North America for chemical usage.

Helpful Conversions

Volume & Weight

Gal	x	3.785	= Liters
Gal	x	128	= Ounces
Gal	x	231	= Cubic Inches
Gal	x	8.3453	= Pounds
Ltr	x	61.02	= Cubic Inches
Ltr	x	33.82	= Ounces
Ltr	x	.2642	= Gallons
Ltr	x	1000	= CM^2
ML (CC)	x	.0338	= Ounces
Gram	x	.03527	= Ounces
PSI	x	.0689	= Bar
Bar	x	14.5	= PSI
In. HG	x	.4912	= PSI
In. H_2O	x	.8226	= In. HG

Temperature

To convert Fahrenheit to Celsius by formula, subtract 32 degrees and divide by 1.8; to convert Celsius to Fahrenheit, multiply by 1.8 and add 32 degrees.

Length

.001 in.	x	25.4	= Microns
Inches	x	25.4	= MM
MM	x	.03937	= Inches

Horsepower

$\frac{GPM \times PSI}{1460}$ = Elec. Brake HP

$\frac{GPM \times PSI}{1714}$ = Hydraulic HP

$\frac{GPM \times PSI}{1100}$ = Gasoline HP (Industrial Grade)

$\frac{GPM \times PSI}{900}$ = Gasoline HP (Standard Grade)

Nozzle

Nozzle # = $GPM \sqrt{\frac{4000}{PSI}}$

GPM = $\text{Nozzle \#} \sqrt{\frac{PSI}{4000}}$

PSI = $4000 \times \left(\frac{GPM}{\text{Nozzle \#}}\right)^2$

Nozzle Chart

SPRAY NOZZLE CHART

Nozzle size	1000 PSI	1200 PSI	1250 PSI	1300 PSI	1500 PSI	1800 PSI	2000 PSI	2100 PSI	2200 PSI	2300 PSI	2400 PSI	2500 PSI	3000 PSI	3200 PSI	3500 PSI	4000 PSI	5000 PSI
2.0	1.00	1.10	1.12	1.14	1.22	1.34	1.41	1.45	1.48	1.52	1.55	1.58	1.73	1.79	1.87	2.00	2.40
2.5	1.25	1.37	1.40	1.43	1.53	1.68	1.77	1.81	1.85	1.90	1.94	1.98	2.17	2.24	2.34	2.50	2.80
3.0	1.50	1.64	1.68	1.71	1.84	2.01	2.12	2.17	2.22	2.27	2.32	2.37	2.60	2.68	2.81	3.00	3.35
3.5	1.75	1.92	1.96	2.00	2.14	2.35	2.47	2.54	2.60	2.65	2.71	2.77	3.03	3.13	3.27	3.50	3.91
4.0	2.00	2.19	2.24	2.28	2.45	2.68	2.83	2.90	2.97	3.03	3.10	3.16	3.46	3.58	3.74	4.00	4.47
4.5	2.25	2.46	2.52	2.57	2.76	3.02	3.18	3.26	3.34	3.41	3.49	3.56	3.90	4.02	4.21	4.50	5.03
5.0	2.50	2.74	2.80	2.85	3.06	3.35	3.54	3.62	3.71	3.79	3.87	3.95	4.33	4.47	4.68	5.00	5.59
5.5	2.75	3.01	3.07	3.14	3.37	3.69	3.89	3.99	4.08	4.17	4.26	4.35	4.76	4.92	5.14	5.50	6.15
6.0	3.00	3.29	3.35	3.42	3.67	4.02	4.24	4.35	4.45	4.55	4.65	4.74	5.20	5.37	5.61	6.00	6.71
6.5	3.25	3.56	3.63	3.71	3.98	4.36	4.60	4.71	4.82	4.93	5.03	5.14	5.63	5.81	6.08	6.50	7.27
7.0	3.50	3.83	3.91	3.99	4.29	4.70	4.95	5.07	5.19	5.31	5.42	5.53	6.06	6.26	6.55	7.00	7.83
7.5	3.75	4.11	4.19	4.28	4.59	5.03	5.30	5.43	5.56	5.69	5.81	5.93	6.50	6.71	7.02	7.50	8.39
8.0	4.00	4.38	4.47	4.56	4.90	5.37	5.66	5.80	5.93	6.07	6.20	6.32	6.93	7.16	7.48	8.00	8.94
8.5	4.25	4.66	4.75	4.85	5.21	5.70	6.01	6.16	6.30	6.45	6.58	6.72	7.36	7.60	7.95	8.50	9.50
9.0	4.50	4.93	5.03	5.13	5.51	6.04	6.36	6.52	6.67	6.82	6.97	7.12	7.79	8.05	8.42	9.00	10.06
9.5	4.75	5.20	5.31	5.42	5.82	6.37	6.72	6.88	7.05	7.20	7.36	7.51	8.23	8.50	8.89	9.50	10.62
10.0	5.00	5.48	5.59	5.70	6.12	6.71	7.07	7.25	7.42	7.58	7.75	7.91	8.66	8.94	9.35	10.00	11.18
12.0	6.00	6.57	6.71	6.84	7.35	8.05	8.49	8.69	8.90	9.10	9.30	9.49	10.39	10.73	11.22	12.00	13.42
15.0	7.50	8.22	8.39	8.55	9.19	10.06	10.61	10.87	11.12	11.37	11.62	11.86	12.99	13.42	14.03	15.00	16.77

VARI-SPRAY HEAD ORIFICE SIZE

ORIFICE SIZE	SPRAYING SYSTEMS SIZE	COLOR	ORIFICE CODE
1.00mm	02.0	Dark Brown	AL106-180060
1.05	02.2	Pink	AL106-180061
1.10	02.5	Red	AL106-180062
1.15	02.7	Lilac	AL106-180063
1.20	03.0	Bright Yellow	AL106-180064
1.25	03.5	Light Green	AL106-180065
1.30	03.8	Orange	AL106-180066
1.35	04.0	Blue	AL106-180067
1.40	04.5	Beige	AL106-180068
1.45	04.8	Dark Yellow	AL106-180069
1.50	05.0	Light Blue	AL106-180070
1.55	05.5	White	AL106-180071
1.60	06.0	Black	AL106-180072
1.65	06.5	Purple	AL106-180073
1.70	07.5	Brown	AL106-180074
1.75	08.5	Gray	AL106-180075
1.80	09.0	Dark Green	AL106-180076

THEORETICAL SPRAY COVERAGE (INCHES)

SPRAY ANGLE °	DISTANCE FROM THE NOZZLE ORIFICE											Spray Pattern	Spray Angle	% IMPACT/SQ. IN. OF THEORETICAL IMPACT *
	2"	4"	6"	8"	10"	12"	15"	18"	24"	30"	36"	FAN	15	30%
15	.5"	1.1"	1.6"	2.1"	2.6"	3.2"	3.9"	4.7"	6.3"	7.9"	9.5"	FAN	25	18%
25	.9"	1.8"	2.7"	3.5"	4.4"	5.3"	6.6"	8"	10.6"	13.3"	15.9"	FAN	40	12%
40	1.5"	2.9"	4.4"	5.8"	7.3"	8.7"	10.9"	13.1"	17.5"	21.8"	26.2"	FAN	50	10%
50	1.9"	3.7"	5.6"	7.5"	9.3"	11.2"	14"	16.8"	22.4"	28"	33.6"	FAN	65	7%
65	2.5"	5.1"	7.6"	10.2"	12.7"	15.3"	19.2"	22.9"	30.5"	38.2"	45.8"			

NOZZLE

* AT 12" (30 CM) DISTANCE FROM THE THEORETICAL IMPACT OF SPRAYING WATER

Impact Force (lbs.) = .0526 x GPM x $\sqrt{PSI}$

Nozzle # = GPM x $\sqrt{\frac{4000}{PSI}}$

GPM= Nozzle # x $\sqrt{\frac{PSI}{4000}}$

PSI = (Nozzle #/GPM)^2 x 4000

Sales & Warranty Conditions

Order Procedures

Phone: AR North America's Sales Department, Monday through Friday, ***651-636-0046*** or ***1-800-893-4235***.

Fax: AR North America at ***651-636-1424*** or ***1-800-331-2762***, 24 hours a day, 7 days a week. (When ordering by fax, give company name, account number, part number, product description, quantity and price.)

E-Mail: AR North America Sales Department at - info@arnorthamerica.com (When ordering by e-mail, type Supply Order in the subject line. Please provide company name, account number, part number, product description, quantity and price.)

Minimum Order Requirement: $25.00

Drop Shipments: $6.00 service fee.

Special Shipping: Instructions should be highlighted.

Order Confirmation: Order confirmations will *NOT* be sent unless requested on order.

Freight

All items will be shipped via UPS or common carrier unless otherwise specified by the customer. All UPS orders will be sent prepaid, unless otherwise specified. Prepaid freight will be added to the invoice.

Payment Terms

Open Account: Upon approval of submitted Credit Application provided by AR North America.

Visa/MasterCard: Orders may be placed using Visa or MasterCard.

American Express: Orders may be placed using American Express.

Warranty Returns

Items returned for warranty consideration must have a ***Returned Merchandise Authorization (RMA)*** number. All unauthorized returns will be refused and shipped back to sender. Please fax requests to: 651-636-1424 or e-mail to shop@arnorthamerica.com.

Prices are list, FOB New Brighton, Minnesota.
Prices are subject to change without prior notification.

Limited Warranty

Annovi Reverberi (A.R.) *Cam Shaft Plunger Pumps* are warranted for a period of five years and *Axial Radial Pumps* are warranted for a period of one year to the original purchaser. *Electric Pressure Washers* are warranted for a period of one year to the original purchaser. This is from the date shipped from factory or U.S. Warehouse. **AR, ArrowLine** and **GF** accessories are warranted for a period of 90 days.

Warranty covers manufacturing defects or workmanship that may develop under normal use and service in a manner up to the directions and usage recommended by the manufacturer.

Warranty does not apply to misuse or when pump or accessory is altered or used in excess of recommended speeds, pressures, temperatures or handling fluids not suitable for pump or accessory material construction. Warranty does not apply to normal wear, freight damage, freezing damage or damage caused by parts or accessories not supplied by AR North America, Inc.

Liability of manufacturer for warranty is limited to repair or replacement at the option of the manufacturer when such products are found to be of original defect or workmanship at the time it was shipped from factory. This warranty is in lieu of all other warranties, expressed or implied, including any warranty of merchantability and of any and all other obligations or liabilities on the part of the manufacturers or equipment.

Master Parts Price List

Oil Capacity and Torque Specifications

Instructions for Adjusting AR Minimatic 4/B

Instructions for Adjusting AR Gymatic Unlader Valves

AR Pump Kit Chart

Pressure Washers

- **Extreme/TSS**
- **Mr. Clean**
- **Planet/TSS**
- **X-Pro**
- **NRG**

Out of Production Items

Pumps

- **XR/XRC 1450 RPM**
- **XRA/XRCA 1750 RPM**
- **XRV/XRCV 3400 RPM**
- **XB**

UNLOADERS

- **COMBISET**
- **MINIMATIC 3/B**

711 - 5th Street SW
New Brighton, MN 55112
Phone: (651) 636-0046 or (800) 893-4235
Fax: (651) 636-1424 or (800) 331-2762
www.arnorthamerica.com
E-mail: info@arnorthamerica.com